IE4(GB1) 超超高效三相异步电动机
SUPER PREMIUM EFFICIENCY THREE-PHASE ASYNCHRONOUS MOTOR

IE4(GB1级)代号说明 IE4 DESIGNATION

JM4 200L-2

- 极数 No.of poles
- 铁芯长度 Core length
- 机座号 Frame size
- IE4(GB1级能效)
- 金龙产品代号 JINGLONG motor identification symbol

JL4 112M-4

- 极数 No.of poles
- 铁芯长度 Core length
- 机座号 Frame size
- IE4(GB1级能效)
- 金龙产品代号 JINGLONG motor identification symbol

防护等级
PROTECTION DEGREE

IP-5 5

- 防喷淋 Splashproof
- 防尘 Protecting against dust
- 国际防护表征字母 International protection symbol

冷却方式
COOLING METHOD

IC-411

- 全封闭自扇冷式 Totally-enclosed fan-cooled type
- 国际冷却法 International cooling symbol

JL4 IE4 (1级能效 GB1) 技术参数 TECHNICAL DATA

SPEED 3000RPM 2-POLE 50HZ

型号 Type	额定功率 Rated Output		额定转速 Rated Speed rpm	效率 Efficiency η% (IE4)	效率 75%负载 Efficiency at 75% load	效率 50%负载 Efficiency at 50% load	功率因数 Power factor cosΦ	额定电流 Rated current A			额定转矩 Rated Torque Nm	堵转转矩/额定转矩 Ts/Tn	最大转矩/额定转矩 Tmax/Tn	堵转电流/额定电流 Is/In	重量 Weight kg
	kW	HP						380V	400V	415V					
JL4-562-2	0.12	0.18	2760	66.5	66.5	65.2	0.72	0.38	0.36	0.35	0.42	2.1	2.2	5.2	5.5
JL4-631-2	0.18	0.25	2745	70.8	70.8	69.4	0.80	0.48	0.46	0.44	0.63	2.2	2.2	5.5	6.5
JL4-632-2	0.25	0.37	2745	74.3	74.3	72.8	0.81	0.63	0.60	0.58	0.87	2.2	2.2	5.5	6.8
JL4-711-2	0.37	0.5	2765	78.1	78.1	76.5	0.81	0.89	0.84	0.81	1.28	2.2	2.2	6.1	7.3
JL4-712-2	0.55	0.75	2765	81.5	81.5	79.9	0.82	1.25	1.19	1.14	1.90	2.3	2.3	6.1	8.5
JL4-801-2	0.75	1	2910	83.5	83.5	81.8	0.82	1.66	1.58	1.52	2.46	2.3	2.3	7.0	11
JL4-802-2	1.1	1.5	2920	85.2	85.2	83.5	0.83	2.36	2.25	2.16	3.60	2.2	2.3	7.3	11.6
JL4-90S-2	1.5	2	2930	86.5	86.5	84.8	0.84	3.14	2.98	2.87	4.89	2.2	2.3	7.6	16
JL4-90L-2	2.2	3	2930	88.0	88.0	86.2	0.85	4.47	4.25	4.09	7.17	2.2	2.3	7.6	20.6
JL4-100L-2	3	4	2935	89.1	89.1	87.3	0.87	5.88	5.59	5.38	9.76	2.2	2.3	7.8	23.7
JL4-112M-2	4	5.5	2940	90.0	90.0	88.2	0.88	7.67	7.29	7.03	13.0	2.2	2.3	8.3	42
JL4-132S1-2	5.5	7.5	2945	90.9	90.9	89.1	0.88	10.4	9.9	9.57	17.8	2.0	2.3	8.3	46
JL4-132S2-2	7.5	10	2950	91.7	91.7	89.9	0.88	14.1	13.4	12.9	24.3	2.0	2.3	7.9	52
JL4-160M1-2	11	15	2960	92.6	92.6	90.7	0.89	20.3	19.3	18.6	35.5	2.0	2.3	8.1	95
JL4-160M2-2	15	20	2960	93.3	93.3	91.4	0.89	27.4	26.1	25.1	48.4	2.0	2.3	8.1	103
JL4-160L-2	18.5	25	2960	93.7	93.7	91.8	0.89	33.7	32.0	30.9	59.7	2.0	2.3	8.2	115
JL4-180M-2	22	30	2965	94.0	94.0	92.1	0.89	40.0	38.0	36.6	70.9	2.0	2.3	8.2	150

SPEED 1500RPM 4-POLE 50HZ

型号 Type	额定功率 Rated Output		额定转速 Rated Speed rpm	效率 Efficiency η% (IE4)	效率 75%负载 Efficiency at 75% load	效率 50%负载 Efficiency at 50% load	功率因数 Power factor cosΦ	额定电流 Rated current A			额定转矩 Rated Torque Nm	堵转转矩/额定转矩 Ts/Tn	最大转矩/额定转矩 Tmax/Tn	堵转电流/额定电流 Is/In	重量 Weight kg
	kW	HP						380V	400V	415V					
JL4-631-4	0.12	0.18	1340	69.8	69.8	68.4	0.72	0.36	0.34	0.33	0.86	2.1	2.2	4.4	5.2
JL4-632-4	0.18	0.25	1340	74.7	74.7	73.2	0.73	0.50	0.48	0.46	1.28	2.1	2.2	4.4	5.8
JL4-711-4	0.25	0.37	1355	77.9	77.9	76.3	0.74	0.66	0.63	0.6	1.76	2.1	2.2	5.2	7.2
JL4-712-4	0.37	0.5	1355	81.1	81.1	79.5	0.75	0.92	0.88	0.85	2.61	2.1	2.2	5.2	8.2
JL4-801-4	0.55	0.75	1420	83.9	83.9	82.2	0.75	1.33	1.26	1.22	3.70	2.4	2.3	5.2	10
JL4-802-4	0.75	1	1430	85.7	85.7	84.0	0.75	1.77	1.68	1.62	5.01	2.3	2.3	6.6	12.9
JL4-90S-4	1.1	1.5	1445	87.2	87.2	85.5	0.76	2.52	2.40	2.31	7.27	2.3	2.3	6.8	16.8
JL4-90L-4	1.5	2	1450	88.2	88.2	86.4	0.77	3.36	3.19	3.07	9.88	2.3	2.3	7.0	19.7
JL4-100L1-4	2.2	3	1455	89.5	89.5	87.7	0.81	4.61	4.38	4.22	14.4	2.3	2.3	7.6	25.5
JL4-100L2-4	3	4	1455	90.4	90.4	88.6	0.82	6.15	5.84	5.63	19.7	2.3	2.3	7.6	31.3
JL4-112M-4	4	5.5	1460	91.1	91.1	89.3	0.82	8.14	7.73	7.45	26.2	2.2	2.3	7.8	39.2
JL4-132S-4	5.5	7.5	1470	91.9	91.9	90.1	0.83	11.0	10.4	10.0	35.7	2.0	2.3	7.9	51.2
JL4-132M-4	7.5	10	1470	92.6	92.6	90.7	0.84	14.6	13.9	13.4	48.7	2.0	2.3	7.5	65
JL4-160M-4	11	15	1475	93.3	93.3	91.4	0.85	21.1	20.0	19.3	71.2	2.2	2.3	7.7	97.3
JL4-160L-4	15	20	1475	93.9	93.9	92.0	0.86	28.2	26.8	25.8	97.1	2.2	2.3	7.8	107
JL4-180M-4	18.5	25	1480	94.2	94.2	92.3	0.86	34.7	33.0	31.8	119.4	2.0	2.3	7.8	145
JL4-180L-4	22	30	1480	94.5	94.5	92.6	0.86	41.1	39.1	37.7	142.0	2.0	2.3	7.8	161

JL4 IE4 (1级能效 GB1) 技术参数 TECHNICAL DATA

SPEED 1000RPM 6-POLE 50HZ

型号 Type	额定功率 Rated Output		额定转速 Rated Speed rpm	效率 Efficiency η% (IE4)	效率 75%负载 Efficiency at 75% load	效率 50%负载 Efficiency at 50% load	功率因数 Power factor cosΦ	额定电流 Rated current A			额定转矩 Rated Torque Nm	堵转转矩/额定转矩 Ts/Tn	最大转矩/额定转矩 Tmax/Tn	堵转电流/额定电流 Is/In	重量 Weight kg
	kW	HP						380V	400V	415V					
JL4-632-6	0.12	0.18	860	64.9	64.9	63.6	0.60	0.47	0.44	0.43	1.33	1.8	1.9	3.5	6.5
JL4-711-6	0.18	0.25	860	70.1	70.1	68.7	0.66	0.59	0.56	0.54	2.00	1.9	2.0	4.0	9.8
JL4-712-6	0.25	0.37	860	74.1	74.1	72.6	0.68	0.75	0.72	0.69	2.78	1.9	2.0	4.0	10.3
JL4-801-6	0.37	0.5	895	78.0	78.0	76.4	0.70	1.03	0.98	0.94	3.95	1.9	2.0	4.7	12.5
JL4-802-6	0.55	0.75	895	80.9	80.9	79.3	0.72	1.43	1.36	1.31	5.87	1.9	2.1	4.7	13.6
JL4-90S-6	0.75	1	950	82.7	82.7	81.0	0.71	1.94	1.84	1.78	7.54	2.0	2.1	6.0	17.2
JL4-90L-6	1.1	1.5	955	84.5	84.5	82.8	0.73	2.71	2.57	2.48	11.0	2.0	2.1	6.0	22.4
JL4-100L-6	1.5	2	960	85.9	85.9	84.2	0.73	3.63	3.45	3.33	14.9	2.0	2.1	6.5	33.5
JL4-112M-6	2.2	3	965	87.4	87.4	85.7	0.74	5.17	4.91	4.73	21.8	2.0	2.1	6.6	38.6
JL4-132S-6	3	4	970	88.6	88.6	86.8	0.74	6.95	6.60	6.37	29.5	2.0	2.1	6.8	46
JL4-132M1-6	4	5.5	975	89.5	89.5	87.7	0.74	9.18	8.72	8.40	39.2	2.0	2.1	6.8	54
JL4-132M2-6	5.5	7.5	975	90.5	90.5	88.7	0.75	12.3	11.7	11.3	53.9	2.0	2.1	7.0	61.8
JL4-160M-6	7.5	10	980	91.3	91.3	89.5	0.79	15.8	15.0	14.5	73.1	2.0	2.1	7.0	88.3
JL4-160L-6	11	15	980	92.3	92.3	90.5	0.80	22.6	21.5	20.7	107.2	2.0	2.1	7.2	125
JL4-180L-6	15	20	985	92.9	92.9	91.0	0.81	30.3	28.8	27.7	145.4	2.0	2.1	7.3	146

SPEED 750RPM 8-POLE 50HZ

型号 Type	额定功率 Rated Output		额定转速 Rated Speed rpm	效率 Efficiency η% (IE4)	效率 75%负载 Efficiency at 75% load	效率 50%负载 Efficiency at 50% load	功率因数 Power factor cosΦ	额定电流 Rated current A			额定转矩 Rated Torque Nm	堵转转矩/额定转矩 Ts/Tn	最大转矩/额定转矩 Tmax/Tn	堵转电流/额定电流 Is/In	重量 Weight kg
	kW	HP						380V	400V	415V					
JL4-712-8	0.12	0.18	610	62.3	62.3	61.1	0.57	0.51	0.49	0.47	1.88	1.8	1.9	2.8	11
JL4-801-8	0.18	0.25	655	67.2	67.2	65.9	0.61	0.67	0.63	0.61	2.62	1.8	1.9	3.3	12.2
JL4-802-8	0.25	0.37	655	70.8	70.8	69.4	0.61	0.88	0.84	0.81	3.65	1.8	1.9	3.3	12.9
JL4-90S-8	0.37	0.5	680	74.3	74.3	72.8	0.61	1.24	1.18	1.14	5.20	1.8	1.9	4.0	17.8
JL4-90L-8	0.55	0.75	680	77.0	77.0	75.5	0.61	1.78	1.69	1.63	7.72	1.8	2.0	4.0	22.1
JL4-100L1-8	0.75	1	700	78.4	78.4	76.8	0.67	2.17	2.06	1.99	10.2	1.8	2.0	4.0	31
JL4-100L2-8	1.1	1.5	700	80.8	80.8	79.2	0.69	3.00	2.85	2.74	15.0	1.8	2.0	5.0	33.5
JL4-112M-8	1.5	2	710	82.6	82.6	80.9	0.70	3.94	3.74	3.61	20.2	1.8	2.0	5.0	39.8
JL4-132S-8	2.2	3	720	84.5	84.5	82.8	0.71	5.57	5.29	5.10	29.2	1.8	2.0	6.0	53
JL4-132M-8	3	4	720	85.9	85.9	84.2	0.73	7.27	6.91	6.66	39.8	1.8	2.0	6.0	61
JL4-160M1-8	4	5.5	730	87.1	87.1	85.4	0.73	9.56	9.08	8.75	52.3	1.9	2.0	6.0	105
JL4-160M2-8	5.5	7.5	730	88.3	88.3	86.5	0.74	12.8	12.1	11.7	72.0	1.9	2.0	6.0	110
JL4-160L-8	7.5	10	730	89.3	89.3	87.5	0.75	17.0	16.2	15.6	98.1	1.9	2.0	6.0	125
JL4-180L-8	11	15	735	90.4	90.4	88.6	0.75	24.7	23.4	22.6	142.9	2.0	2.0	6.5	133

JL4 (GB1)安装及外型尺寸 MOUNTING AND OVERALL DIMENSIONS

IM B3 H56–180

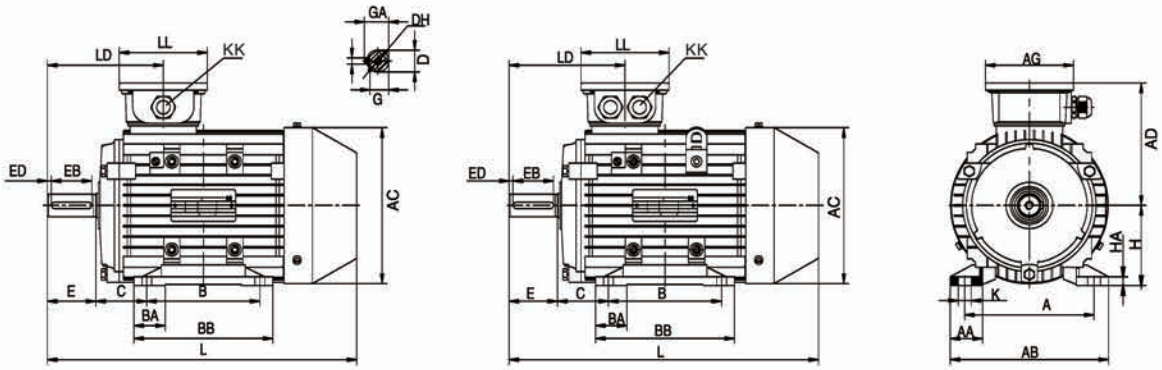

56–90 100-180

型号 Type	A	AA	AB	AC	AD	AG	B	BA	BB	C	D	DH	E	EB	ED	F	G	GA	H	HA	K	KK	L	LD	LL
56	90	23	111	113	96	86	71	22.5	88	36	9	M4X12	20	16	2	3	7.2	10.2	56	7	5.8X8.3	1-M20X1.5	199	83	86
63	100	24	123	120	102	101	80	25.5	100	40	11	M4X12	23	16	3.5	4	8.5	12.5	63	7	7X9.5	1-M20X1.5	217	95.5	101
71	112	26	138	136	109	101	90	27.5	110	45	14	M5X12	30	25	2.5	5	11	16	71	8	7X11	1-M20X1.5	245	110.5	101
80	125	35	157	158	129	101	100	31	125	50	19	M6X16	40	30	5	6	15.5	21.5	80	8	10X14	1-M25X1.5	290	115	101
90S	140	37	173	175	140	109	100	31.5	125	56	24	M8X19	50	40	5	8	20	27	90	10	10X14	1-M25X1.5	325	145	109
90L	140	37	173	175	140	109	125	31.5	150	56	24	M8X19	50	40	5	8	20	27	90	10	10X14	1-M25X1.5	350	145	109
100L	160	40	196	198	156	109	140	39	172	63	28	M10X22	60	50	5	8	24	31	100	11	12X16	1-M32X1.5	398	148.5	109
112M	190	40	227	225	176	117.5	140	43	180	70	28	M10X22	60	50	5	8	24	31	112	12	12X16	2-M32X1.5	427	162	117.5
132S	216	51	262	258	188	117.5	140	46	186	89	38	M12X28	80	65	7.5	10	33	41	132	15	12X16	2-M32X1.5	445	180	117.5
132M	216	51	262	258	188	117.5	178	46	224	89	38	M12X28	80	65	7.5	10	33	41	132	15	12X16	2-M32X1.5	483	180	117.5
132M-4	216	51	262	258	188	117.5	178	46	224	89	38	M12X28	80	65	7.5	10	33	41	132	15	12X16	2-M32X1.5	539	180	117.5
160M	254	55	304	315	242	167	210	50	260	108	42	M16X36	110	90	10	12	37	45	160	18	15X18	2-M40X1.5	589	268.5	167
160L	254	55	304	315	242	167	254	50	304	108	42	M16X36	110	90	10	12	37	45	160	18	15X18	2-M40X1.5	633	268.5	167

IM B5 H56–180

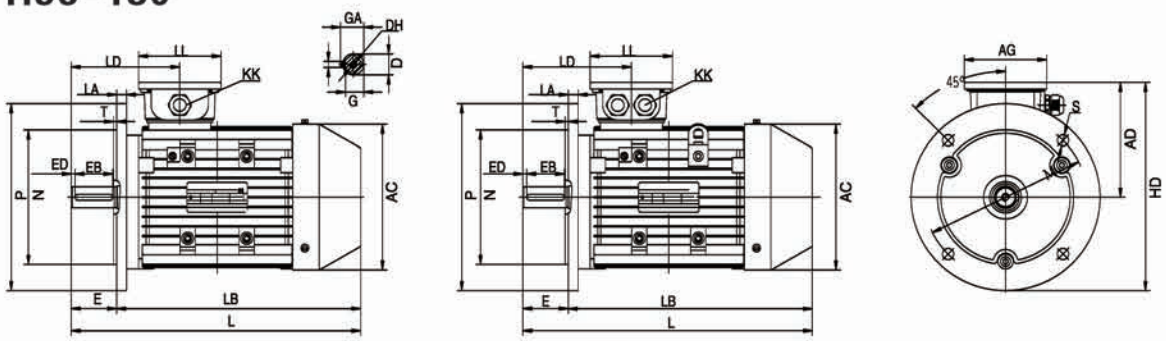

56–90 100-180

型号 Type	AC	AD	AG	D	DH	E	EB	ED	F	G	GA	HD	METRIC	L	LA	LB	LD	LL	M	N	P	S	T
56	113	96	86	9	M4X12	20	16	2	3	7.2	10.2	156	1-M20X1.5	199	8	179	83	86	100	80	120	7	3
63	120	102	101	11	M4X12	23	16	3.5	4	8.5	12.5	172	1-M20X1.5	217	10	194	95.5	101	115	95	140	10	3
71	136	109	101	14	M5X12	30	25	2.5	5	11	16	189	1-M20X1.5	245	10	215	110.5	101	130	110	160	10	3.5
80	158	129	101	19	M6X16	40	30	5	6	15.5	21.5	229	1-M25X1.5	290	12	250	115	101	165	130	200	12	3.5
90S	175	140	109	24	M8X19	50	40	5	8	20	27	240	1-M25X1.5	325	12	275	145	109	165	130	200	12	3.5
90L	175	140	109	24	M8X19	50	40	5	8	20	27	240	1-M25X1.5	350	12	300	145	109	165	130	200	12	3.5
100L	198	156	109	28	M10X22	60	50	5	8	24	31	281	1-M32X1.5	398	13	338	148.5	109	215	180	250	14.5	4
112M	225	176	117.5	28	M10X22	60	50	5	8	24	31	301	2-M32X1.5	427	14	334	162	117.5	215	180	250	14.5	4
132S	258	188	117.5	38	M12X28	80	65	7.5	10	33	41	338	2-M32X1.5	445	14	365	180	117.5	265	230	300	14.5	4
132M	258	188	117.5	38	M12X28	80	65	7.5	10	33	41	338	2-M32X1.5	483	14	403	180	117.5	265	230	300	14.5	4
132M-4	258	188	117.5	38	M12X28	80	65	7.5	10	33	41	338	2-M32X1.5	539	14	459	180	117.5	265	230	300	14.5	4
160M	315	242	167	42	M16X36	110	90	10	12	37	45	417	2-M40X1.5	589	15	479	268.5	167	300	250	350	18.5	5
160L	315	242	167	42	M16X36	110	90	10	12	37	45	417	2-M40X1.5	633	15	523	268.5	167	300	250	350	18.5	5

JL4 (GB1)安装及外型尺寸
MOUNTING AND OVERALL DIMENSIONS

IM B35 H56-180

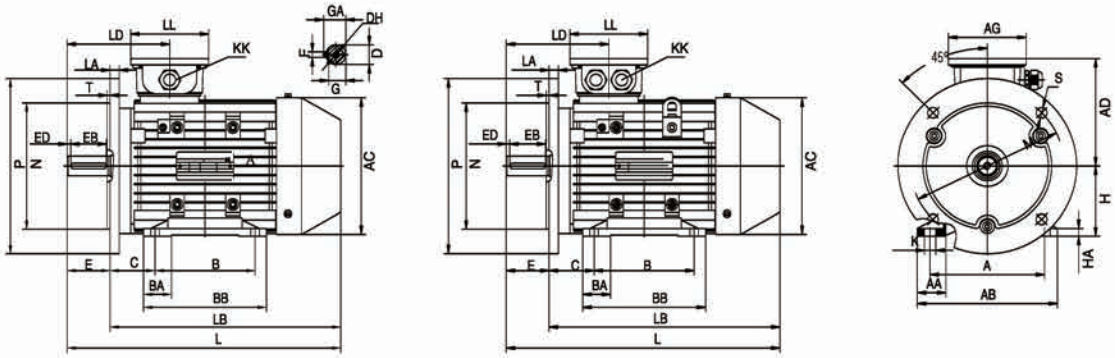

56-90 100-180

型号 Type	A	AA	AB	AC	AD	AG	B	BA	BB	C	D	DH	E	EB	ED	F	G	GA	H	HA	K	METRIC	L	LA	LB	LD	LL	M	N	P	S	T
56	90	23	111	113	96	86	71	22.5	88	36	9	M4X12	20	16	2	3	7.2	10.2	56	7	5.8X8.3	1-M20X1.5	199	8	179	83	86	100	80	120	7	3
63	100	24	123	120	102	101	80	25.5	100	40	11	M4X12	23	16	3.5	4	8.5	12.5	63	7	7X9.5	1-M20X1.5	217	10	194	95.5	101	115	95	140	10	3
71	112	26	138	136	109	101	90	27.5	110	45	14	M5X12	30	25	2.5	5	11	16	71	8	7X11	1-M20X1.5	245	10	215	110.5	101	130	110	160	10	3.5
80	125	35	157	158	129	101	100	31	125	50	19	M6X16	40	30	5	6	15.5	21.5	80	8	10X14	1-M25X1.5	290	12	250	115	101	165	130	200	12	3.5
90S	140	37	173	175	140	109	100	31.5	125	56	24	M8X19	50	40	5	8	20	27	90	10	10X14	1-M25X1.5	325	12	275	145	109	165	130	200	12	3.5
90L	140	37	173	175	140	109	125	31.5	150	56	24	M8X19	50	40	5	8	20	27	90	10	10X14	1-M25X1.5	350	12	300	145	109	165	130	200	12	3.5
100L	160	40	196	198	156	109	140	39	172	63	28	M10X22	60	50	5	8	24	31	100	11	12X16	1-M32X1.5	398	13	338	148.5	109	215	180	250	14.5	4
112M	190	40	227	225	176	117.5	140	43	180	70	28	M10X22	60	50	5	8	24	31	112	12	12X16	2-M32X1.5	427	14	334	162	118	215	180	250	14.5	4
132S	216	51	262	258	188	117.5	140	46	186	89	38	M12X28	80	65	7.5	10	33	41	132	15	12X16	2-M32X1.5	445	14	365	180	118	265	230	300	14.5	4
132M	216	51	262	258	188	117.5	178	46	224	89	38	M12X28	80	65	7.5	10	33	41	132	15	12X16	2-M32X1.5	483	14	403	180	118	265	230	300	14.5	4
132M-4	216	51	262	258	188	117.5	178	46	224	89	38	M12X28	80	65	7.5	10	33	41	132	15	12X16	2-M32X1.5	539	14	459	180	118	265	230	300	14.5	4
160M	254	55	304	315	242	167	210	50	260	108	42	M16X36	110	90	10	12	37	45	160	18	15X18	2-M40X1.5	589	15	479	268.5	167	300	250	350	18.5	5
160L	254	55	304	315	242	167	254	50	304	108	42	M16X36	110	90	10	12	37	45	160	18	15X18	2-M40X1.5	633	15	523	268.5	167	300	250	350	18.5	5

IM B34A H56-180

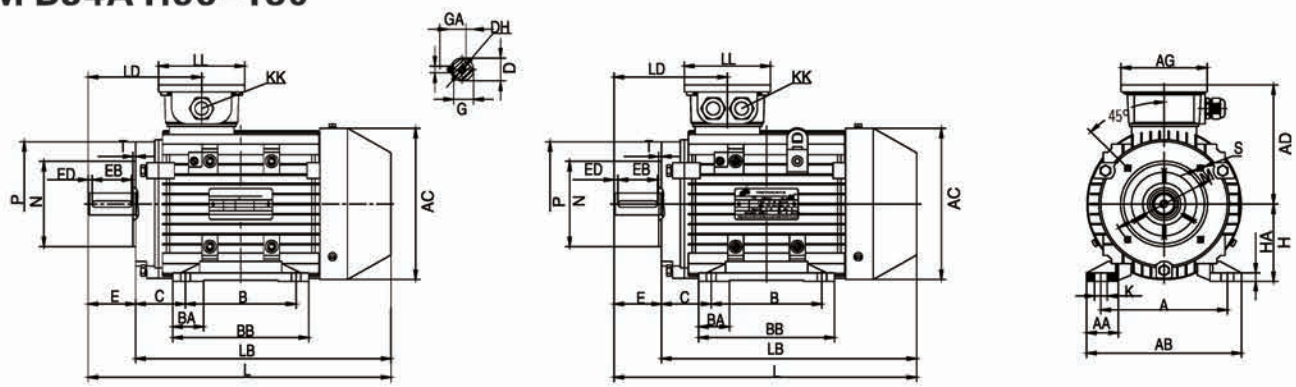

56-90 100-160

型号 Type	A	AA	AB	AC	AD	AG	B	BA	BB	C	D	DH	E	EB	ED	F	G	GA	H	HA	K	METRIC	L	LB	LD	LL	M	N	P	S	T
56	90	23	111	113	96	86	71	22.5	88	36	9	M4X12	20	16	2	3	7.2	10.2	56	7	5.8X8.3	1-M20X1.5	199	179	83	86	65	50	80	M5	2.5
63	100	24	123	120	102	101	80	25.5	100	40	11	M4X12	23	16	3.5	4	8.5	12.5	63	7	7X9.5	1-M20X1.5	217	194	95.5	101	75	60	90	M5	2.5
71	112	26	138	136	109	101	90	27.5	110	45	14	M5X12	30	25	2.5	5	11	16	71	8	7X11	1-M20X1.5	245	215	110.5	101	85	70	105	M6	2.5
80	125	35	157	158	129	101	100	31	125	50	19	M6X16	40	30	5	6	15.5	21.5	80	8	10X14	1-M25X1.5	290	250	115	101	100	80	120	M6	3
90S	140	37	173	175	140	109	100	31.5	125	56	24	M8X19	50	40	5	8	20	27	90	10	10X14	1-M25X1.5	325	275	145	109	115	95	140	M8	3
90L	140	37	173	175	140	109	125	31.5	150	56	24	M8X19	50	40	5	8	20	27	90	10	10X14	1-M25X1.5	350	300	145	109	115	95	140	M8	3
100L	160	40	196	198	156	109	140	39	172	63	28	M10X22	60	50	5	8	24	31	100	11	12X16	1-M32X1.5	398	338	148.5	109	130	110	160	M8	3.5
112M	190	40	227	225	176	117.5	140	43	180	70	28	M10X22	60	50	5	8	24	31	112	12	12X16	2-M32X1.5	427	334	162	117.5	130	110	160	M8	3.5
132S	216	51	262	258	188	117.5	140	46	186	89	38	M12X28	80	65	7.5	10	33	41	132	15	12X16	2-M32X1.5	445	365	180	117.5	165	130	200	M10	3.5
132M	216	51	262	258	188	117.5	178	46	224	89	38	M12X28	80	65	7.5	10	33	41	132	15	12X16	2-M32X1.5	483	403	180	117.5	165	130	200	M10	3.5
132M-4	216	51	262	258	188	117.5	178	46	224	89	38	M12X28	80	65	7.5	10	33	41	132	15	12X16	2-M32X1.5	539	459	180	117.5	165	130	200	M10	3.5
160M	254	55	304	315	242	167	210	50	260	108	42	M16X36	110	90	10	12	37	45	160	18	15X18	2-M40X1.5	589	479	268.5	167	215	180	250	M12	4
160L	254	55	304	315	242	167	254	50	304	108	42	M16X36	110	90	10	12	37	45	160	18	15X18	2-M40X1.5	633	523	268.5	167	215	180	250	M12	4

JL4 (GB1)安装及外型尺寸 MOUNTING AND OVERALL DIMENSIONS

IM B14A H56-180

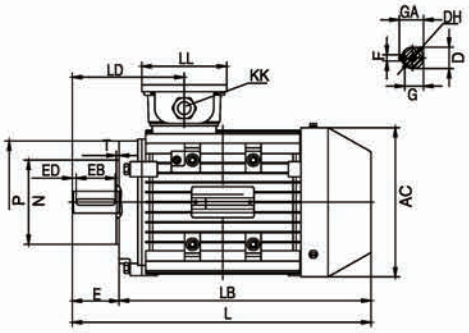

56-90

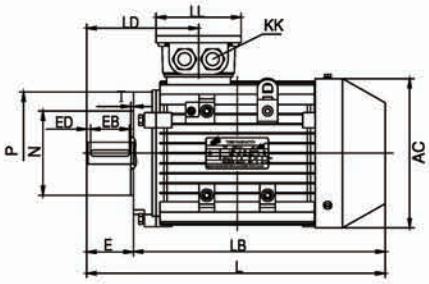

100-160

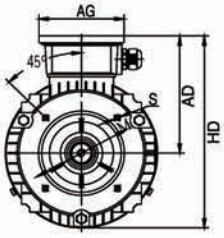

型号 Type	AC	AD	AG	D	DH	E	EB	ED	F	G	GA	HD	METRIC	L	LB	LD	LL	M	N	P	S	T
56	113	96	86	9	M4X12	20	16	2	3	7.2	10.2	152.5	1-M20X1.5	199	179	83	86	65	50	80	M5	2.5
63	120	102	101	11	M4X12	23	16	3.5	4	8.5	12.5	162	1-M20X1.5	217	194	95.5	101	75	60	90	M5	2.5
71	136	109	101	14	M5X12	30	25	2.5	5	11	16	177	1-M20X1.5	245	215	110.5	101	85	70	105	M6	2.5
80	158	129	101	19	M6X16	40	30	5	6	15.5	21.5	208	1-M25X1.5	290	250	115	101	100	80	120	M6	3
90S	175	140	109	24	M8X19	50	40	5	8	20	27	227.5	1-M25X1.5	325	275	145	109	115	95	140	M8	3
90L	175	140	109	24	M8X19	50	40	5	8	20	27	227.5	1-M25X1.5	350	300	145	109	115	95	140	M8	3
100L	198	156	109	28	M10X22	60	50	5	8	24	31	255	1-M32X1.5	398	338	148.5	109	130	110	160	M8	3.5
112M	225	176	117.5	28	M10X22	60	50	5	8	24	31	291	2-M32X1.5	427	334	162	117.5	130	110	160	M8	3.5
132S	258	188	117.5	38	M12X28	80	65	7.5	10	33	41	317	2-M32X1.5	445	365	180	117.5	165	130	200	M10	3.5
132M	258	188	117.5	38	M12X28	80	65	7.5	10	33	41	317	2-M32X1.5	483	403	180	117.5	165	130	200	M10	3.5
123M-4	258	188	117.5	38	M12X28	80	65	7.5	10	33	41	317	2-M32X1.5	539	459	180	117.5	165	130	200	M10	3.5
160M	315	242	167	42	M16X36	110	90	10	12	37	45	399.5	2-M40X1.5	589	479	268.5	167	215	180	250	M12	4
160L	315	242	167	42	M16X36	110	90	10	12	37	45	399.5	2-M40X1.5	633	523	268.5	167	215	180	250	M12	4

IM B34B H56-180

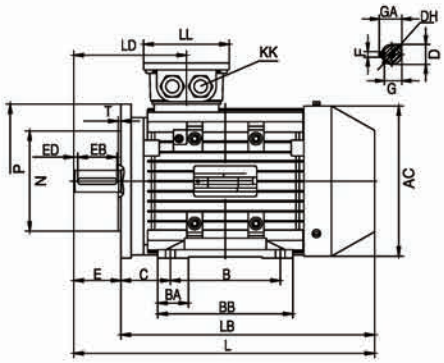

56-90

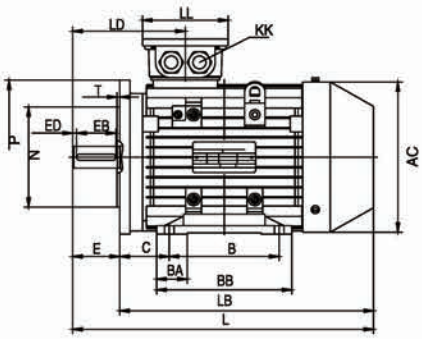

100-160

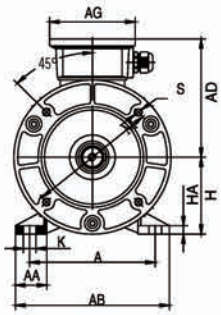

型号 Type	A	AA	AB	AC	AD	AG	B	BA	BB	C	D	DH	E	EB	ED	F	G	GA	H	HA	K	METRIC	L	LB	LD	LL	M	N	P	S	T
56	90	23	111	113	96	86	71	22.5	88	36	9	M4X12	20	16	2	3	7.2	10.2	56	7	5.8X8.3	1-M20X1.5	199	179	83	86	85	70	105	M6	2.5
63	100	24	123	120	102	101	80	25.5	100	40	11	M4X12	23	16	3.5	4	8.5	12.5	63	7	7X9.5	1-M20X1.5	217	194	95.5	101	100	80	120	M6	3
71	112	26	138	136	109	101	90	27.5	110	45	14	M5X12	30	25	2.5	5	11	16	71	8	7X11	1-M20X1.5	245	215	110.5	101	115	95	140	M8	3
80	125	35	157	158	129	101	100	31	125	50	19	M6X16	40	30	5	6	15.5	21.5	80	8	10X14	1-M25X1.5	290	250	115	101	130	110	160	M8	3.5
90S	140	37	173	175	140	109	100	31.5	125	56	24	M8X19	50	40	5	8	20	27	90	10	10X14	1-M25X1.5	325	275	145	109	130	110	160	M8	3.5
90L	140	37	173	175	140	109	125	31.5	150	56	24	M8X19	50	40	5	8	20	27	90	10	10X14	1-M25X1.5	350	300	145	109	130	110	160	M8	3.5
100L	160	40	196	198	156	109	140	39	172	63	28	M10X22	60	50	5	8	24	31	100	11	12X16	1-M32X1.5	398	338	148.5	109	165	130	200	M10	3.5
112M	190	40	227	225	176	117.5	140	43	180	70	28	M10X22	60	50	5	8	24	31	112	12	12X16	2-M32X1.5	394	334	162	117.5	165	130	200	M10	3.5
132S	216	51	262	258	188	117.5	140	46	186	89	38	M12X28	80	65	7.5	10	33	41	132	15	12X16	2-M32X1.5	445	365	180	117.5	215	180	250	M12	4
132M	216	51	262	258	188	117.5	178	46	224	89	38	M12X28	80	65	7.5	10	33	41	132	15	12X16	2-M32X1.5	483	403	180	117.5	215	180	250	M12	4
132M-4	216	51	262	258	188	117.5	178	46	224	89	38	M12X28	80	65	7.5	10	33	41	132	15	12X16	2-M32X1.5	539	459	180	117.5	215	180	250	M12	4
160M	254	55	304	315	242	167	210	50	260	108	42	M16X36	110	90	10	12	37	45	160	18	15X18	2-M40X1.5	589	479	268.5	167	265	230	300	M12	4
160L	254	55	304	315	242	167	254	50	304	108	42	M16X36	110	90	10	12	37	45	160	18	15X18	2-M40X1.5	633	523	268.5	167	265	230	300	M12	4

JL4 (GB1)安装及外型尺寸
MOUNTING AND OVERALL DIMENSIONS

IM B14B H56–180

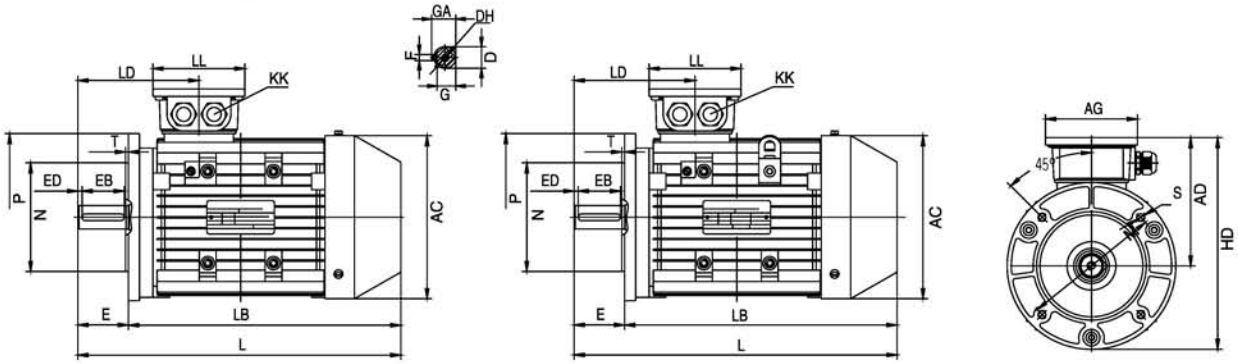

56–90 100-160

型号 Type	AC	AD	AG	D	DH	E	EB	ED	F	G	GA	HD	METRIC	L	LB	LD	LL	M	N	P	S	T
56	113	96	86	9	M4X12	20	16	2	3	7.2	10.2	152.5	1–M20X1.5	199	179	83	86	85	70	105	M6	2.5
63	120	102	101	11	M4X12	23	16	3.5	4	8.5	12.5	162	1–M20X1.5	217	194	95.5	101	100	80	120	M6	3
71	136	109	101	14	M5X12	30	25	2.5	5	11	16	179	1–M20X1.5	245	215	110.5	101	115	95	140	M8	3
80	158	129	101	19	M6X16	40	30	5	6	15.5	21.5	209	1–M25X1.5	290	250	115	101	130	110	160	M8	3.5
90S	175	140	109	24	M8X19	50	40	5	8	20	27	227.5	1–M25X1.5	325	275	145	109	130	110	160	M8	3.5
90L	175	140	109	24	M8X19	50	40	5	8	20	27	227.5	1–M25X1.5	350	300	145	109	130	110	160	M8	3.5
100L	198	156	109	28	M10X22	60	50	5	8	24	31	256	1–M32X1.5	398	338	148.5	109	165	130	200	M10	3.5
112M	230	176	117.5	28	M10X22	60	50	5	8	24	31	291	2–M32X1.5	427	334	154	117.5	165	130	200	M10	3.5
132S	258	188	117.5	38	M12X28	80	65	7.5	10	33	41	317	2–M32X1.5	445	365	180	117.5	215	180	250	M12	4
132M	258	188	117.5	38	M12X28	80	65	7.5	10	33	41	317	2–M32X1.5	483	403	180	117.5	215	180	250	M12	4
132M–4	258	188	117.5	38	M12X28	80	65	7.5	10	33	41	317	2–M32X1.5	539	459	180	117.5	215	180	250	M12	4
160M	315	242	167	42	M16X36	110	90	10	12	37	45	399.5	2–M40X1.5	589	479	268.5	167	265	230	300	M12	4
160L	315	242	167	42	M16X36	110	90	10	12	37	45	399.5	2–M40X1.5	633	523	268.5	167	265	230	300	M12	4