JLEJ ALUMINUM ELECTROMAGNETIC BRAKING THREE-PHASE ASYNCHRONOUS MOTORS

JLEJ铝壳电磁制动三相异步电动机

DC制动电动机概述
GENERALIZATION OF DC BRAKE MOTOR

JLEJ系列DC电动机是全封闭自扇冷式鼠笼型，具有附加圆盘直流电磁制电器的三相异步电动，机是按IEC标准设计的新系列制动电动机该电机采用全铝合金压铸型外壳，并可拆卸底脚方便按装形式的转换，具有造型独特、美观、结构紧扣效率高、起动迅速、振动小、噪声低等优点。此外，制动器具有人工释放机构,这样可以达到人工、电器释放的功能，方便用户调试及使用。

JLEJ系列DC制动电动机适用于要求快速停止准确定位、往复运转、频繁起动防止滑行的各种机械中作主轴转动和辅助转动用，如升降机械、包装机械、运输机械、食品机械、印刷机械、纺织机械、减速机械等。

JLEJ系列DC制动电动机的直流圆制动器安装在电机非轴伸端上，当制动电动机接入电流制动器也同时工作。由于电磁吸力作用,电磁吸引衔铁并压缩弹簧，制动盘与衔铁、端盘脱开电动机开始运转。当切断电源时制动器电磁铁失去电磁吸引力，弹簧推动衔铁压紧制动盘在磨擦力矩的作用下，电动机立即停止工作。

JLEJ series DC brake motors, designed according to IEC standard, are totally-enclosed fan-cooled squirrel-cage three phase asynchronous motors with additional electromagnetic brake disc in DC direct current. The motor with removable feet is made of aluminum-alloy die-casting. Various mounting mode is available. It has a lot of advantages including beautiful modeling, compact structure, high efficiency, large starting torque, prompt braking, excellent performance, low noise, low vibration etc. Besides, the brake has a manual release device, which allows the brake a function of both manual and electrical release and is convenient for using.

JLEJ series DC brake motors are suitable for the machinery that requires prompt braking, correct positioning, repeated running, frequent starting and avoiding slipping, such as elevating machinery, transportation machinery, packing machinery, food machinery, printing machinery, weaving machinery and reducers etc.

The DC brake disc is assembled on the non-drive end shaft. When the power is supplied to the motor, the brake also begins to work. The magnetic force absorbs the armature and presses the spring. Thus the disc is disconnected with armature and endshield, and the motor begins to run. When the power supply is interrupted, it doesn' t exert the magnetic force and the armature is pushed by the spring, compresses the brake disc, thereby creating a braking action.

代号说明
DESIGNATION

产品型号
MOTOR IDENTIFICATION SYMBOL

JLEJ-80 1-4

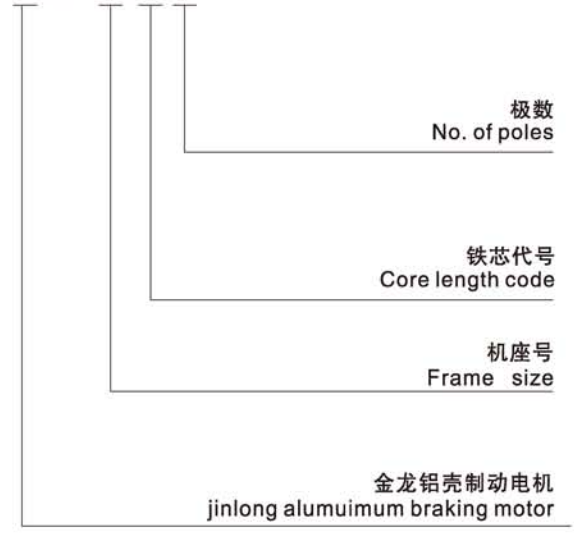

使用条件
OPERATING CONDITIONS

环境空气温度：≤40℃
海拔：≤1000米
相对湿度：≤95%
额定电压：380V 400V 415V
额定频率：50HZ 60HZ
接法：3kW及以下规格为Y接法，
4kW及以上规格为“△”接法
电磁制动器额定电压：功率在3kW及以下为直流99V，
4kW及以上为直流170V
工作方法：连续S1

Ambient temperature : ≤40℃

Altitude: Up to 1000m above sea level

Relative Humidity: less than 95%

Rated voltage: 380V 400V 415V

Rated frequency: 50HZ 60HZ

Connection: Star for 3kW and below, Delta for 4kW and above

Voltage of brake: DC 99V for 3kW and below, 170V for 4kW and above

Duty Type: Continuous (S1)

轴承规格 BEARING SIZE

DC

机座号 Frame size	极数 Poles	轴伸端 Drive End 轴承型号 International type	非轴伸端 Non-Drive End 轴承型号 International type
63	2—4	6201 ZZ-C3	6201 ZZ-C3
71	2—6	6202 ZZ-C3	6202 ZZ-C3
80	2—8	6204 ZZ-C3	6204 ZZ-C3
90	2—8	6205 ZZ-C3	6205 ZZ-C3
100	2—8	6206 ZZ-C3	6206 ZZ-C3
112	2—8	6206 ZZ-C3	6206 ZZ-C3
132	2—8	6208 ZZ-C3	6208 ZZ-C3
160	2—8	6309 ZZ-C3	6209 ZZ-C3

DC结构图 DC CONSTRUCTION DIAGRAM

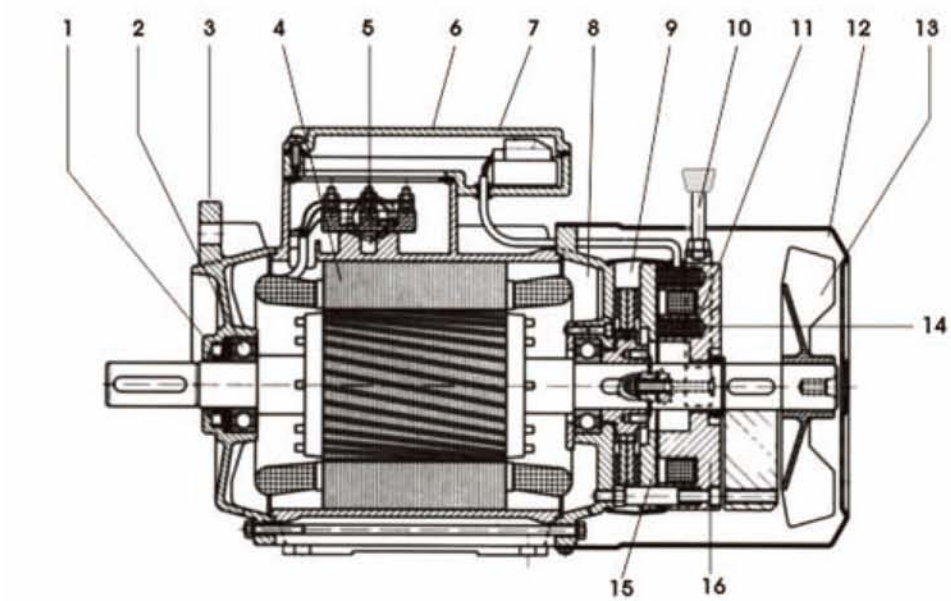

1	油封	9	制动盘	1.Oil seal	9.Brake disc
2	轴承	10	手动释放装置	2.Bearing	10.Manual release lever
3	前端盖	11	弹簧	3.Front endshield	11.Spring
4	定子	12	风罩	4.Stator	12.Fan cover
5	接线板	13	风叶	5.Terminal board	13.Fan
6	接线盒	14	调节螺钉	6.Terminal box	14.Adjusting screw
7	整流器	15	电磁铁	7.Rectifier	15.Electromagnet
8	后端盖	16	衔铁	8.Back endshield	16.Armature

DC

JLEJ 技术参数 TECHNICALDATA

型号 Type	功率 Output kW	功率 Output HP	转速 Speed r/min	电流 In (A)	效率 Efficiency η%	功率因数 Power Factor cosΦ	额定转矩 Tn Nm	额定转矩 Ts/Tn	额定转矩 Tmax/Tn	额定电流 Is/In	惯量 Moment J kgm²	静制动力矩 Full Load Braking Moment	空载制动时间不大于 Max Braking Time at No Load (s)	制动器功率 Brake power W	噪声 Noise LwdB(A)	重量 Weight Kg
380V 50HZ 2pole 3000rpm																
JLEJ631-2	0.18	0.25	2720	0.53	65.0	0.80	0.61	2.2	2.3	5.5	0.00055	4.0	0.15	20.0	58	7.8
JLEJ632-2	0.25	0.37	2720	0.69	68.0	0.81	0.96	2.2	2.3	5.5	0.00060	4.0	0.15	20.0	58	8.1
JLEJ711-2	0.37	0.5	2740	0.99	70.0	0.81	1.26	2.2	2.3	6.1	0.00075	5.0	0.15	28.0	61	9.0
JLEJ712-2	0.55	0.75	2740	1.4	73.0	0.82	1.88	2.2	2.3	6.1	0.00090	5.0	0.15	28.0	61	9.5
JLEJ801-2	0.75	1	2840	1.83	75.1	0.83	2.54	2.2	2.3	6.1	0.00120	7.5	0.20.	30.0	64	12.7
JLEJ802-2	1.1	1.5	2840	2.58	77.0	0.84	3.72	2.2	2.3	7.0	0.00140	7.5	0.20	30.0	64	13.5
JLEJ90S-2	1.5	2	2840	3.43	79.0	0.84	5.04	2.2	2.3	7.0	0.00290	15.0	0.25	45.0	69	16.3
JLEJ90L-2	2.2	3	2840	4.85	81.1	0.85	7.40	2.2	2.3	7.0	0.00550	15.0	0.25	45.0	69	18.0
JLEJ100L-2	3	4	2860	6.33	82.8	0.87	9.95	2.2	2.3	7.5	0.01000	30.0	0.30	60.0	73	27.0
JLEJ112M-2	4	5.5	2880	8.18	84.4	0.88	13.22	2.2	2.3	7.5	0.01260	40.0	0.35	65.0	74	37.0
JLEJ132S1-2	5.5	7.5	2900	10.1	85.9	0.88	18.11	2.2	2.3	7.5	0.03770	80.0	0.40	90.0	77	49.1
JLEJ132S2-2	7.5	10	2900	14.9	87.2	0.88	24.70	2.2	2.3	7.5	0.04990	80.0	0.40	90.0	77	54.5
JLEJ160M1-2	11	15	2930	21.2	88.5	0.89	35.85	2.2	2.3	7.5	0.05190	150.0	0.50	110.0	83	84.2
JLEJ16 0M2-2	15	20	2930	28.6	89.5	0.89	48.89	2.2	2.3	7.5	0.07500	150.0	0.50	110.0	83	93.0
JLEJ160L-2	18.5	25	2930	34.6	90.2	0.90	60.30	2.2	2.3	7.5	0.12400	150.0	0.50	110.0	83	103.5
380V 50HZ 4pole 1500rpm																
JLEJ631-4	0.12	0.18	1310	0.44	57.0	0.72	0.84	2.1	2.2	4.4	0.00040	4.0	0.15	20.0	48	7.8
JLEJ632-4	0.18	1.25	1310	0.62	60.0	0.73	1.26	2.1	2.2	4.4	0.00055	4.0	0.15	20.0	48	8.1
JLEJ711-4	0.25	0.37	1330	0.79	65.3	0.74	1.73	2.1	2.2	5.2	0.00060	5.0	0.15	28.0	53	9.0
JLEJ712-4	0.37	0.5	1330	1.12	67.0	0.75	2.56	2.1	2.2	5.2	0.00075	5.0	0.15	28.0	53	9.5
JLEJ801-4	0.55	0.75	1390	1.57	71.1	0.75	3.75	2.3	2.3	5.2	0.00090	7.5	0.20	30.0	58	13.4
JLEJ802-4	0.75	1	1390	2.05	73.1	0.76	5.11	2.3	2.3	6.0	0.00120	7.5	0.20	30.0	58	14.8
JLEJ90S-4	1.1	1.5	1390	2.84	76.3	0.77	7.50	2.3	2.3	6.0	0.00140	15.0	0.25	45.0	59	16.5
JLEJ90L-4	1.5	2	1390	3.67	78.6	0.79	10.23	2.3	2.3	6.0	0.00290	15.0	0.25	45.0	59	18.3
JLEJ100L1-4	2.2	3	1410	5.08	81.2	0.81	14.80	2.3	2.3	7.0	0.00550	30.0	0.30	60.0	61	26.8
JLEJ100L2-4	3	4	1410	6.72	82.7	0.82	20.13	2.3	2.3	7.0	0.01090	30.0	0.30	60.0	61	29.5
JLEJ112M-4	4	5.5	1435	8.79	84.3	0.82	26.53	2.3	2.3	7.0	0.01260	40.0	0.35	65.0	62	37.5
JLEJ132S-4	5.5	7.5	1440	11.70	85.8	0.83	36.48	2.3	2.3	7.0	0.03770	80.0	0.40	90.0	69	51.5
JLEJ132M-4	7.5	10	1440	15.60	87.1	0.84	49.74	2.3	2.3	7.0	0.04990	80.0	0.40	90.0	69	57.5
JLEJ160M-4	11	15	1460	22.50	88.5	0.84	71.59	2.3	2.3	7.0	0.05500	150.0	0.50	110.0	72	87.5
JLEJ160L-4	15	20	1460	30.00	89.5	0.85	98.12	2.3	2.3	7.0	0.07500	150.0	0.50	110.0	73	100.6

JLEJ 技术参数 TECHNICALDATA

DC

型号 Type	功率 Output kW	功率 Output HP	转速 Speed r/min	电流 In (A)	效率 Efficiency η %	功率因数 Power Factor cosΦ	额定转矩 Tn Nm	额定转矩 / 额定转矩 Ts/Tn	额定转矩 / 最大转矩 Tmax/Tn	额定电流 / 堵转电流 Is/In	惯量 Moment J kgm²	静制动力矩 Full Load Braking Moment	空载制动时间不大于 Max Braking Time at No Load (s)	制动器功率 Brake power W	噪声 Noise LwdB(A)	重量 Weight Kg
380V 50HZ 6pole 1000rpm																
JLEJ801-6	0.37	0.5	885	1.30	62.0	0.70	3.93	1.9	2.0	4.7	0.00160	7.5	0.20	30	51	12.9
JLEJ802-6	0.55	0.75	885	1.78	65.0	0.72	5.84	1.9	2.1	4.7	0.00190	7.5	0.20	30	51	14.4
JLEJ90S-6	0.75	1	910	2.29	69.0	0.72	7.87	2.0	2.1	5.5	0.00290	15.0	0.25	45	54	16.6
JLEJ90L-6	1.1	1.5	910	3.18	72.1	0.73	11.54	2.0	2.1	5.5	0.00350	15.0	0.25	45	54	18.2
JLEJ100L-6	1.5	2	920	3.99	76.1	0.75	15.24	2.0	2.1	5.5	0.00690	30.0	0.30	60	58	29.0
JLEJ112M-6	2.2	3	935	5.55	79.2	0.76	22.35	2.1	2.1	6.5	0.01400	40.0	0.35	65	62	36.2
JLEJ132S-6	3	4	960	7.40	81.1	0.76	29.84	2.1	2.1	6.5	0.02860	75.0	0.40	90	66	50.2
JLEJ132M1-6	4	5.5	960	9.74	82.1	0.76	39.79	2.1	2.1	6.5	0.03570	75.0	0.40	90	66	53.0
JLEJ132M2-6	5.5	7.5	960	12.90	84.1	0.77	54.71	2.1	2.1	6.5	0.04490	75.0	0.40	110	66	57.2
JLEJ160M-6	7.5	10	970	17.20	86.1	0.77	73.84	2.1	2.1	6.5	0.08100	150.0	0.50	110	70	85.6
JLEJ160L-6	11	15	970	24.50	87.6	0.78	108.30	2.1	2.1	6.5	0.11600	150.0	0.50	110	70	90.0
380V 50HZ 8pole 750rpm																
JLEJ100L1-8	0.75	1	680	2.40	71.0	0.67	10.23	1.8	2.0	4.0	0.00900	30	0.30	60	56	29.0
JLEJ100L2-8	1.1	1.5	680	3.32	73.0	0.69	15.00	1.8	2.0	5.0	0.01100	30	0.30	60	56	31.1
JLEJ112M-8	1.5	2	690	4.40	75.0	0.69	20.46	1.8	2.0	5.0	0.02450	40	0.35	65	59	38.2
JLEJ132S-8	2.2	3	705	6.04	78.0	0.71	29.59	1.8	2.0	6.0	0.03140	75	0.40	90	61	50.3
JLEJ132M-8	3	4	705	7.90	79.0	0.73	40.35	1.8	2.0	6.0	0.03950	75	0.40	90	61	55.0
JLEJ160M1-8	4	5.5	720	10.30	81.0	0.73	53.06	1.9	2.0	6.0	0.07530	150	0.50	110	65	83.5
JLEJ160M2-8	5.5	7.5	720	13.60	83.0	0.74	72.59	2.0	2.0	6.0	0.09310	150	0.50	110	65	91.0
JLEJ160L-8	7.5	10	720	17.80	85.5	0.75	99.50	2.0	2.0	6.0	0.12600	150	0.50	110	65	100.2

JLEJ 安装及外形尺寸
MOUNTING AND OVERALL DIMENSIONS

DC

IM B5 IM B36
JLEJ63-160

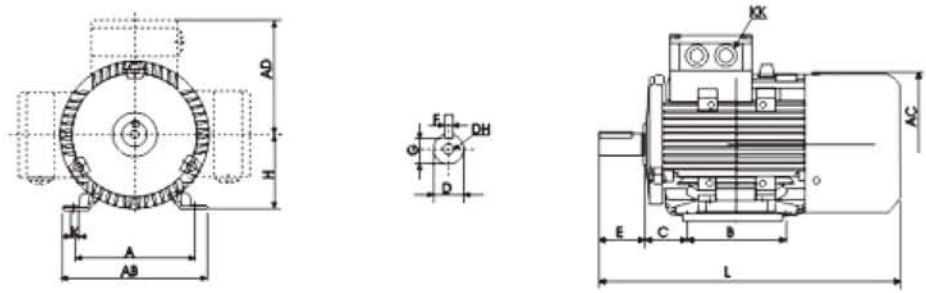

IM B14B
JLEJ63-160

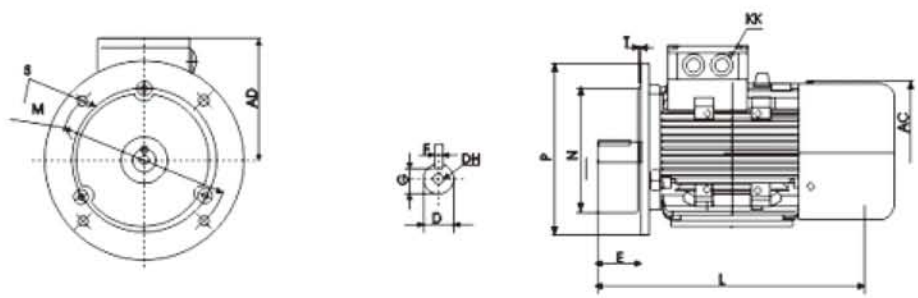

JLEJ63–160 B3.B5/B35

机座号 Frame size	A	AB	AC	AD	B	C	D	DH	E	F	G	H	K	KK	L	M	N	P	S	T
56	90	111	113	121	71	36	9	M4X12	20	3	7.2	56	5.8x8.3	1-M20X1.5	244	100	80	120	7	3.0
63	100	123	120	115	80	40	11	M4X12	23	4	8.5	63	7x9.5	1-M20X1.5	265	115	95	140	10	3.0
71	112	138	136	122	90	45	14	M5X12	30	5	11	71	7x11	1-M20X1.5	290	130	110	160	10	3.5
80	125	157	155	137	100	50	19	M6X16	40	6	15.5	80	10x14	1-M25X1.5	351	165	130	200	12	3.5
90s	140	173	175	146	100	56	24	M8X19	50	8	20.0	90	10x14	1-M25X1.5	388	165	130	200	12	3.5
90L	140	173	175	146	125	56	24	M8X19	50	8	20.0	90	10x14	1-M25X1.5	413	165	130	200	12	3.5
100L	160	196	195	160	140	68	28	M10X22	60	8	24.0	100	12x16	2-M32X1.5	454	215	180	250	15	4.0
112M	190	227	219	177	140	70	28	M12X28	60	8	24.0	112	12x16	2-M32X1.5	475	215	330	250	15	4.0
132S	216	262	258	196	140	89	38	M12X28	80	10	33.0	132	12x16	2-M32X1.5	567	465	230	300	15	4.0
132M	216	262	258	196	178	89	38	M12X28	80	10	33.0	132	12x16	2-M32X1.5	605	265	250	300	15	4.0
160M	254	304	315	242	210	108	42	M16X36	110	12	37.0	160	15x18	2-M40X1.5	718	300	250	350	19	5.0
160L	254	304	315	242	254	108	42	M16X36	110	12	37.0	160	15x18	2-M40X1.5	762	300	250	350	19	5.0

JLEJ 安装及外形尺寸
MOUNTING AND OVERALL DIMENSIONS

IM B14A
JLEJ63-160

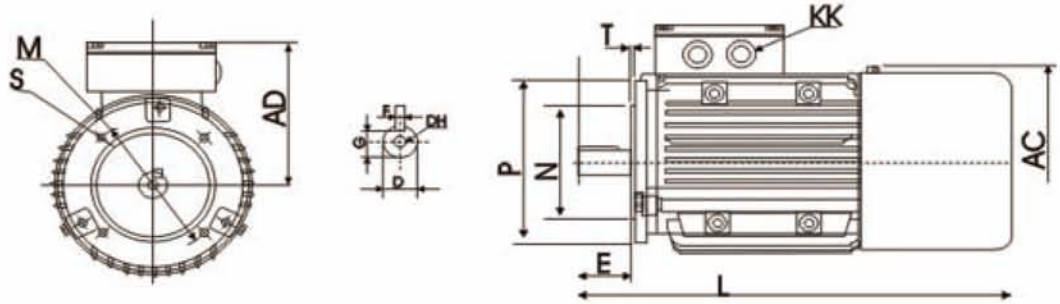

IM B14B
JLEJ63-160

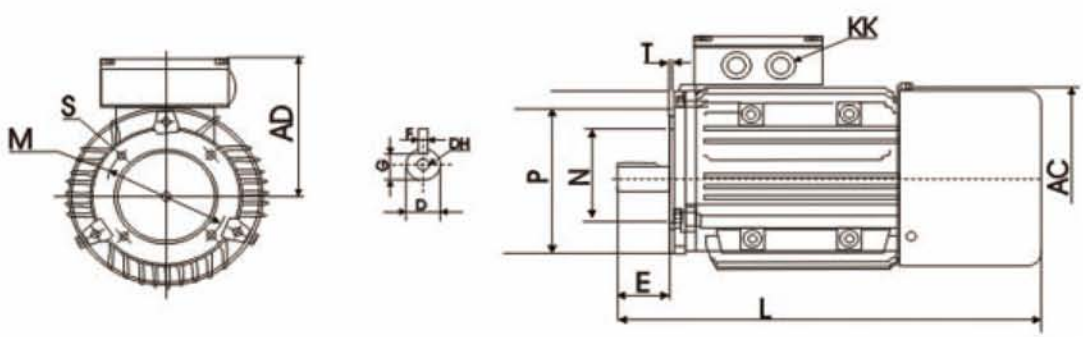

JLEJ163–160 B14A.B14B

机座号 Frame size	AC	AD	D	DH	E	F	G	KK	L	B14A					B14B				
										M	N	P	S	T	M	N	P	S	T
56	113	121	9	M4x12	20	3	7.2	1-M20x1.5		65	50	80	M5	2.5	85	70	105	M6	2.5
63	120	115	11	M4x12	23	4	8.5	1-M20x1.5	240	75	60	90	M5	2.5	100	80	120	M6	3.5
71	136	122	14	M5x12	30	5	11.0	1-M20x1.5	270	85	70	105	M6	2.5	115	95	140	M8	3.0
80	155	137	19	M6x16	40	6	15.5	1-M25x1.5	375	100	80	120	M6	3.0	130	110	160	M8	3.5
90s	175	146	24	M8x19	50	8	20.0	1-M25x1.5	400	115	95	140	M8	3.0	130	110	160	M8	3.5
90L	175	146	24	M8x19	50	8	20.0	1-M25x1.5	426	115	95	140	M8	3.0	130	110	160	M8	3.5
100L	195	160	28	M10x22	60	8	24.0	2-M32x1.5	465	130	110	160	M8	3.5	165	130	200	M10	3.5
112M	219	177	28	M10x22	60	8	24.0	2-M32x1.5	495	130	110	160	M8	3.5	165	130	200	M10	3.5
132S	258	196	38	M12x28	80	10	33.0	2-M32x1.5	570	165	130	200	M10	3.5	215	180	250	M12	4.0
132M	258	196	38	M12x28	80	10	33.0	2-M32x1.5	610	165	130	200	M10	3.5	215	180	250	M12	4.0
160M	315	242	42	M16x36	110	12	37.0	2-M40x1.5	715	215	180	250	M12	4.0	265	230	300	M12	4.0
160L	315	242	42	M16x36	110	12	37.0	21-M40x1.5	760	215	180	250	M12	4.0	265	230	300	M12	4.0

A C制动电动机概述

GENERALIZATION OF AC BRAKE MOTOR

AC

JLEJ系列A C制动电动机是全封闭自扇冷式鼠笼型，具有附加圆盘型交流制动器三相异步电动机，是按IEC标准，符合国际使用需求设计的新系列制动电动机。该电动机采用铝合金压铸成型的外壳，并有可拆卸底脚，方便按装形式的多种转换，具有造型独特、美观、结构紧扣、效率高、起动转矩高、制动迅速、振动小噪音低等优点。此外制动器具有人工释放机构，这样可以达到人工、电器释放的功能，方便用户调试及使用。

JLEJ系列A C制动电动机使用于要求快速停止、准确定位、往复运转、频繁启动、防止滑行的各种机械中作主轴传动和辅助传动用，如升降机械、包装机械、运输机械、印刷机械、纺织机械、减速机械、等等。

JLEJ系列A C制动电动机的交流制动器同电动机后端紧密配合整体按装在电动机非轴伸端上。当制动电动机接入电源，制动器也同时工作。由于电磁吸力作用压缩弹簧，瞬间将制动动作盘吸合在制吸盘上，从而使制动片得以释放，电机能灵活运转。当切断电流时、制动器同时失电达到快速制动。在停机状态下，若需调试制动电机，应将释放手柄从风罩后背螺母内外中插入并旋入制动动作盘的螺纹孔中，能使制动片得以释放。

JLEJ series AC brake motors, designed according to IEC standard, are totally-enclosed fan-cooled squirrel-cage three phase asynchronous motors with additional electromagnetic brake disc in AC alternating current. The motor with removable feet is made of aluminum-alloy die-casting. Various mounting mode is available. It has a lot of advantages including beautiful modeling, compact structure, high efficiency, large starting torque, prompt braking, excellent performance, low noise, low vibration etc. Besides, the brake has a manual release device, which allows the brake a function of both manual and electrical release and is convenient for using.

JLEJ series AC brake motors are suitable for the machinery that requires prompt braking, correct positioning, repeated running, frequent starting and avoiding slipping, such as elevating machinery, transportation machinery, packing machinery, food machinery, printing machinery, weaving machinery and reducers etc.

The AC brake disc is assembled on the non-drive end shaft. When the power is supplied to the motor, the brake also begins to work. The magnetic force absorbs the armature and presses the spring. The braking acting disc is absorbed against the absorbing disc. The brake is released, and then the motor begins to run smoothly. When the power supply is interrupted, it doesn' t exert the magnetic force and created a prompt braking action. For adjustment, insert the release lever into the screw hole on the bake of fan cover and screw into the threaded hole in the braking acting disc. It can make the brake released.

使用条件

OPERATING CONDITIONS

环境空气温度：≤40℃
海拔：≤1000米
相对湿度：≤95%
额定电压：380V 400V 415V
额定频率：50HZ 60HZ
接法：3kW及以下规格为Y接法，
4kW及以上规格为“△”接法
电磁制动器额定电压：功率在3kW及以下为直流99V，
4kW及以上为直流170V
工作方法：连续S1

Ambient temperature : ≤40℃

Altitude: Up to 1000m above sea level

Relative Humidity: less than 95%

Rated voltage: 380V 400V 415V

Rated frequency: 50HZ 60HZ

Connection: Star for 3kW and below, Delta for 4kW and above

Voltage of brake: DC 99V for 3kW and below, 170V for 4kW and above

Duty Type: Continuous (S1)

使用说明 DESIGNATION

产品型号

MOTOR IDENTIFICATION SYMBOL

JLEJ-AC-801-4

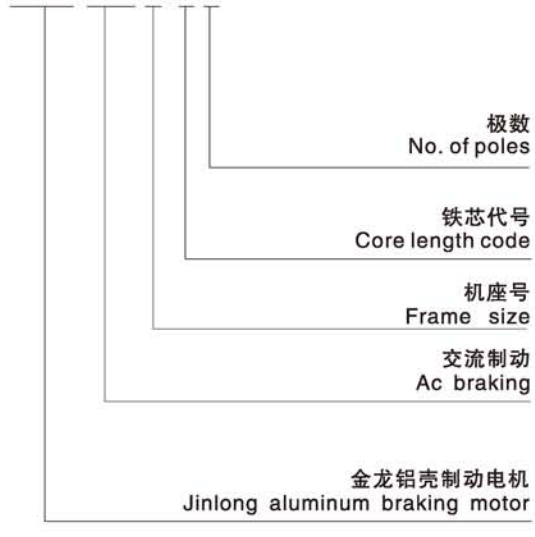

AC 结构图

AC CONSTRUCTION DIAGRAM

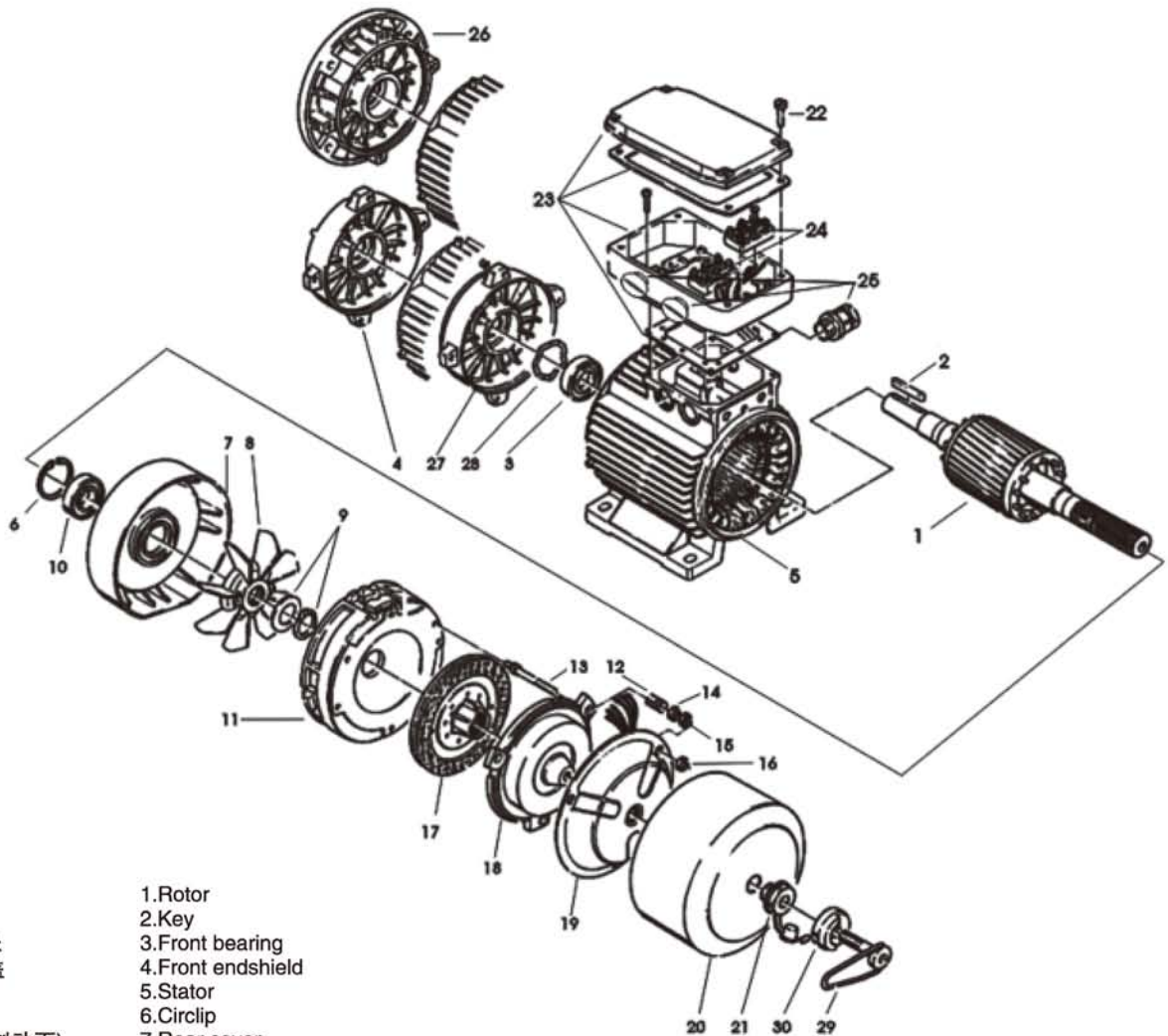

1	转子	1.Rotor
2	平健	2.Key
3	前轴承	3.Front bearing
4	前端盖	4.Front endshield
5	定子	5.Stator
6	卡簧	6.Circlip
7	后盖(制动面)	7.Rear cover
8	风叶	8.Fan
8	风叶卡簧	9.Fan clamp
10	后轴承	10.Rear bearing
11	后盖	11.Rear cover (brake surface)
12	弹簧	12.Spring
13	调节螺钉	13.Adjusting screw
14	固定螺母	14.Fixing nut
15	气隙调节螺母	15.Airgap adjusting nut
16	固定螺母	16.Fixing nut
17	制动盘	17.Brake disc
18	衔铁	18.Armature
19	制动线圈	19.Brake coil
20	罩盖	20.End cover
21	塑料六角螺母	21.Plastic hexagonal nut
22	接线盒固定螺丝	22.Terminal box screws
23	接线盒	23.Terminal box
24	接线板	24.Terminal board
25	螺母螺套或螺塞	25.Cable gland or cap
26	B5法兰	26.B5 flange
27	B14法兰	27.B14 flange
28	波形圆	28.Wave washer
29	手动释放装置	29.Manual release lever
30	制动支点	30.Fulcrum hub for brake release

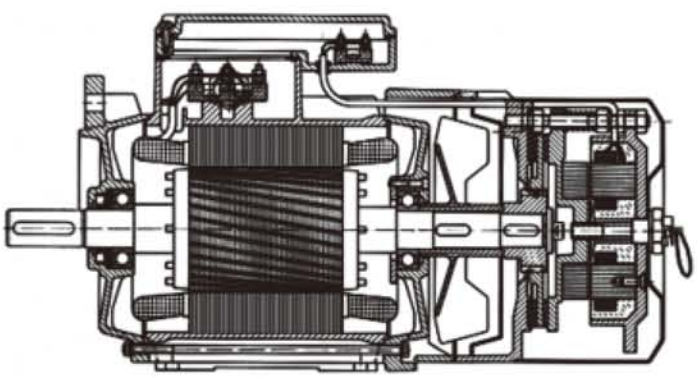

轴承规格 BEARING SIZE

AC

机座号 Frame size	极数 Poles	轴伸端 Drive Eed	非轴伸端Non-Drive End
		轴承型号 International type	轴承型号 International type
71	2-6	6202 ZZ-C3	6202 ZZ-C3
80	2-8	6204 ZZ-C3	6204 ZZ-C3
90	2-8	6205 ZZ-C3	6205 ZZ-C3
100	2-8	6206 ZZ-C3	6206 ZZ-C3

技术数据 TECHNICAL DATA

400V 50Hz 2pole 3000rpm

型号 Type	功率 Output		转速 Speed	电流 In	效率 Efficiency	功率因数 Power Factor	额定转矩	堵转转矩/额定转矩	最大转矩/额定转矩	堵转电流/额定电流	惯量 Moment	静制动力矩 Full Load Braking Moment	空载制动时间不大于 Max Braking Time at No Load	噪声 Noise	重量 Weight
	kW	HP	r/min	(A)	η%	cosΦ	Tn Nm	Ts/Tn	Tmax/Tn	Is/In	J kgm²		(s)	LwdB(A)	kg
JLEJ AC 711-2	0.37	0.5	2740	0.94	70.0	0.81	1.26	2.2	2.3	6.1	0.00075	14	0.15	61	9.3
JLEJ AC 712-2	0.55	0.75	2740	1.33	73.0	0.82	1.88	2.2	2.3	6.1	0.00090	14	0.15	61	10.5
JLEJ AC 801-2	0.75	1	2840	1.73	75.1	0.83	2.54	2.2	2.3	6.1	0.00120	18	0.20	64	14.5
JLEJ AC 802-2	1.1	1.5	2840	2.45	77.0	0.84	3.72	2.2	2.3	7.0	0.00140	18	0.20	64	15.5
JLEJ AC 90S-2	1.5	2	2840	3.26	79.0	0.84	5.04	2.2	2.3	7.0	0.00290	38	0.25	69	20.0
JLEJ AC 90L-2	2.2	3	2840	4.61	81.1	0.85	7.40	2.2	2.3	7.0	0.00550	38	0.25	69	22.5
JLEJ AC100L-2	3	4	2860	6.01	82.8	0.87	9.95	2.2	2.3	7.5	0.01090	50	0.30	73	30.5

JLEJ 技术参数 TECHNICALDATA

AC

型号 Type	功率 Output kW	功率 Output HP	转速 Speed r/min	电流 In (A)	效率 Efficiency η%	功率因数 Power Factor cosΦ	额定转矩 Tn Nm	堵转转矩/额定转矩 Ts/Tn	最大转矩/额定转矩 Tmax/Tn	堵转电流/额定电流 Is/In	惯量 Moment J kgm²	静制动力矩 Full Load Braking Moment	空载制动时间不大于 Max Braking Time at No Load (s)	噪声 Noise LwdB(A)	重量 Weight kg
400v 50Hz 4pole 1500rpm															
JLEJ AC 711-4	0.25	0.37	1330	0.75	65.0	0.74	1.73	2.1	2.2	5.2	0.00060	14	0.15	53	9.3
JLEJ AC 712-4	0.37	0.5	1330	1.60	67.0	0.75	2.56	2.1	2.2	5.2	0.00075	14	0.15	53	10.5
JLEJ AC 801-4	0.55	0.75	1390	1.49	71.1	0.75	3.75	2.3	2.3	5.2	0.00090	18	0.20	58	14.0
JLEJ AC 802-4	0.75	1	1390	1.95	73.1	0.76	5.11	2.3	2.3	6.0	0.00120	18	0.20	58	15.0
JLEJ AC 90S-4	1.1	1.5	1390	2.70	76.3	0.77	7.50	2.3	2.3	6.0	0.00140	38	0.25	59	20.0
JLEJ AC 90L-4	1.5	2	1390	3.49	78.6	0.79	10.23	2.3	2.3	6.0	0.00290	38	0.25	59	22.5
JLEJ AC 100L1-4	2.2	3	1410	4.83	81.2	0.81	17.80	2.3	2.3	7.0	0.00550	50	0.30	61	30.2
JLEJ AC 100L2-4	3	4	1410	6.39	82.7	0.82	20.18	2.3	2.3	7.0	0.00580	50	0.30	61	33.0
400V 50Hz 6pole 1000rpm															
JLEJ AC 711-6	0.18	0.25	850	0.70	56.0	0.66	1.91	1.9	2.0	4.0	0.00040	14	0.15	49	10.5
JLEJ AC 712-6	0.25	0.37	850	0.90	59.0	0.68	2.65	1.9	2.0	4.0	0.00055	14	0.15	49	10.5
JLEJ AC 801-6	0.37	0.5	885	1.23	62.0	0.70	3.93	1.9	2.0	4.7	0.00060	18	0.20	51	14.5
JLEJ AC 802-6	0.55	0.75	885	1.69	65.0	0.72	5.84	1.9	3.1	4.7	0.00075	18	0.20	51	15.5
JLEJ AC 90S-6	0.75	1	910	2.18	69.0	0.72	7.87	2.0	2.1	5.5	0.00090	38	0.25	54	19.5
JLEJ AC 90L-6	1.1	1.5	910	3.02	72.1	0.73	11.54	2.0	2.1	5.5	0.00120	38	0.25	54	22.0
JLEJ AC 100L-6	1.5	2	920	3.79	76.1	0.75	15.24	2.0	2.1	5.5	0.00140	50	0.30	58	30.5
400V 50Hz 8pole 750rpm															
JLEJ AC 801-8	0.18	0.25	645	0.84	51.0	0.61	2.49	1.8	1.9	3.3	0.00040	18	0.20	49	14.5
JLEJ AC 802-8	0.25	0.37	645	1.10	54.0	0.61	3.46	1.8	1.9	3.3	0.00055	18	0.20	49	15.5
JLEJ AC 90S-8	0.37	0.4	670	1.41	62.0	0.61	5.12	1.8	1.9	4.0	0.00060	38	0.25	53	19.5
JLEJ AC 90L-8	0.55	0.75	670	2.07	63.0	0.61	7.61	1.8	2.0	4.0	0.00075	38	0.25	53	22.0
JLEJ AC 100L-8	0.75	1	680	2.28	71.0	0.67	10.23	1.8	2.0	4.0	0.00090	50	0.30	56	30.5

AC

JLEJ 安装及外形尺寸
MOUNTING AND OVERALL DIMENSIONS

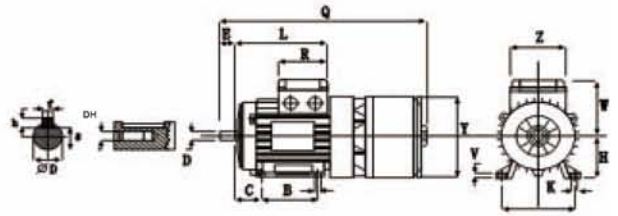

IMB3
JLEJ AC71-100

机座号 Frame size	D	E	F	G	H	L	Q	R	V	Y	Z	A	B	C	H	I	K	W	DH
71	14	30	5	11.0	5	188	342	122	8.5	140	75.0	112	90	45	71	7	7	118	M5x12
80	19	40	6	15.5	6	202	370	122	8.5	159	75.0	125	100	50	80	9	10	134	M6x16
90S	24	50	8	20.0	7	308	410	130	10.5	179	98.5	140	100	56	90	10	10	140	M8x19
90L	24	50	8	20.0	7	328	435	130	10.5	179	98.5	140	125	56	90	10	10	140	M8x19
100L	28	60	8	24.0	10	375	485	140	11.5	199	100.0	160	140	63	100	12	12	160	M10x22

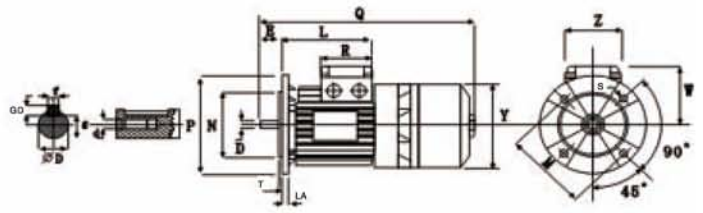

IM B5
JLEJ AC 71-100

机座号 Frame size	D	E	F	G	GD	L	Q	R	V	Y	Z	S	M	N	T	P	LA	DH
71	14	30	5	11.0	5	188	342	122	8.5	140	75.0	10	130	110	3.5	160	10	M5x12
80	19	40	6	15.5	6	202	370	122	8.5	159	75.0	12	165	130	3.5	200	12	M6x16
90S	24	50	8	20.0	7	308	410	130	10.5	179	98.5	12	165	130	3.5	200	12	M8x19
90L	24	50	8	20.0	7	328	435	130	10.5	179	98.5	12	165	130	3.5	200	12	M8x19
100L	28	60	8	24.0	10	375	485	140	11.5	199	100.0	15	215	180	4.0	250	15	M10x22

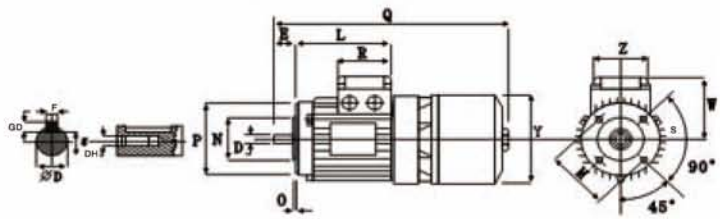

IM B14
JLEJAC 71-100

机座号 Frame size	D	E	F	G	GD	L	Q	R	V	Y	Z	S	M	N	O	P	DH
71	14	30	5	11.0	5	188	342	122	8.5	140	75.0	M6	85	70	2.5	105	M5x12
80	19	40	6	15.5	6	202	370	122	8.5	159	75.0	M6	100	80	3.0	120	M6x16
90S	24	50	8	20.0	7	308	410	130	10.5	179	98.5	M8	115	95	3.0	140	M8x19
90L	24	50	8	20.0	7	328	435	130	10.5	179	98.5	M8	115	95	3.0	140	M8x19
100L	28	60	8	24.0	10	375	485	140	11.5	199	100.0	M8	130	110	3.5	160	M10x22