IEEE-841 Motors

Applications:

Above ground mines, cement plants, chemical plants and paper plants, and other extreme environmental conditions.

Features:

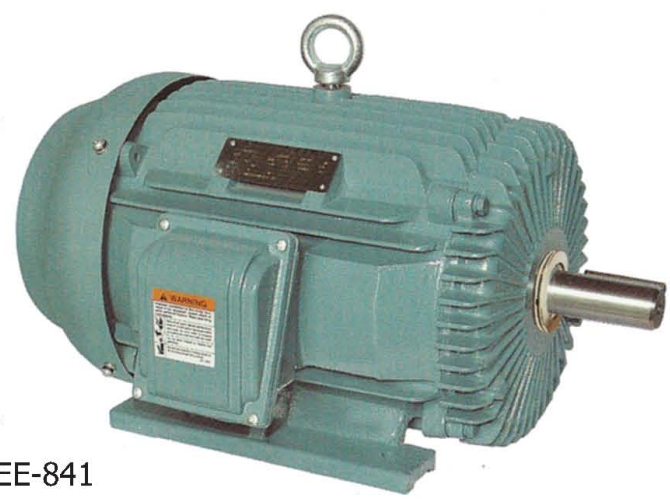

- Ground lug in conduit box
- Re-greasable bearings from 140T to N5808
- Extended Grease Pipes
- 3 Leads with neoprene gasket
- Oversized bearings with lubrication instruction label
- Use polyerea-thickened or compatible grease
- Inpro-Seal (D.E. & O.D.E.)
- IP56 for 140T frame and larger
- CSA safety certified and EEV verfied
- Certified test report enclosed with each motor
- Nameplate shows AFBMA number & meets IEEE-841
- Low noise leel with optimum designed out fan
- C-flange available (449T & below)
- Imperial thread (according to ASME B1.1-2001)
- Cast Iron Fan Cover, Steel Fan
- Motor efficiency meets or exceeds
- NEMA Premium Efficiency level
- High Torque Characteristics
- Low Winding & Bearing Temperature
- Special design and fabrication capable of operating with inverter drive application
- Inverter meets NEMA MG-1 Part 31
- Class B temp. rise /Class F Insulation
- Class 1, Division 2, Groups A, B, C, D - T3C
- Spark Resistant Wire
- CT 15:1, VT 30:1

NEMA

Standard Full Line Motors

IEEE-841 Motors

HP	RPM	FRAME	CATALOG	FULL EFFI.	460V AMPS	AMPS 575V	WT.
1	1800	143T	TE14T01	85.5	1.47	1.18	--
	1200	145T	TE16T01	82.5	1.72	1.38	--
1.5	3600	143T	TE322T01	84	1.96	1.57	--
	1800	145T	TE324T01	86.5	2.1	1.68	--
	1200	182T	TE326T01	87.5	2.29	1.83	--
2	3600	145T	TE22T01	85.5	2.62	2.1	--
	1800	145T	TE24T01	86.5	2.79	2.23	--
	1200	184T	TE26T01	88.5	3.08	2.46	--
3	3600	182T	TE32T01	86.5	3.63	2.9	--
	1800	182T	TE34T01	89.5	3.76	3	--
	1200	213T	TE36T01	89.5	4.35	3.48	--
5	3600	184T	TE52T01	88.5	6.04	4.83	--
	1800	184T	TE54T01	89.5	6.34	5.07	--
	1200	215T	TE56T01	89.5	7.41	5.93	--
7.5	3600	213T	TE72T01	89.5	8.76	7	234
	1800	213T	TE74T01	91.7	9.41	7.53	165
	1200	254T	TE76T01	91	10.1	8.08	282
10	3600	215T	TE102T01	90.2	11.9	9.52	173
	1800	215T	TE104T01	91.7	12.7	10.16	172
	1200	256T	TE106T01	91	13.4	10.72	316
15	3600	254T	TE152T01	91	17	13.6	280
	1800	254T	TE154T01	92.4	17.2	13.76	291
	1200	284T	TE156T01	91.7	19.1	15.3	360
20	3600	256T	TE202T01	91	23	18.4	313
	1800	256T	TE204T01	93	23.3	18.7	324
	1200	286T	TE206T01	91.7	25.3	20.3	503
25	3600	284TS	TE252T01	91.7	28.1	22.5	353
	1800	284T	TE254T01	93.6	28.8	23	481
	1200	324T	TE256T01	93	30.8	24.7	605
30	3600	286TS	TE302T01	91.7	33.5	26.8	428
	1800	286T	TE304T01	93.6	34.3	27.5	525
	1200	326T	TE306T01	93	35.8	28.7	673
40	3600	324TS	TE402T01	92.4	45.3	36.3	561
	1800	324T	TE404T01	94.1	46.5	37.2	640
	1200	364T	TE406T01	94.1	47.6	38.1	1076
50	3600	326TS	TE502T01	93	55.5	44.4	607
	1800	326T	TE504T01	94.5	56.5	45.2	662
	1200	365T	TE506T01	94.1	58.8	47	1127
60	3600	364TS	TE602T01	93.6	67	53.6	992
	1800	364T	TE604T01	95	68.3	54.7	1036
	1200	404T	TE606T01	94.5	70.3	56.3	1346
75	3600	365TS	TE702T01	93.6	81.9	65.5	1025
	1800	365T	TE704T01	95.4	83.2	66.6	1047
	1200	405T	TE706T01	94.5	85.9	68.7	1478
100	3600	405TS	TE1002T01	94.1	111	88.8	1361
	1800	405T	TE1004T01	95.4	112	89.6	1302
	1200	444T	TE1006T01	95	117	93.6	2006
125	3600	444TS	TE1252T01	95	132	105.6	1794
	1800	444T	TE1254T01	95.4	135	108	1841
	1200	445T	TE1256T01	95	140	112	2082
150	3600	445TS	TE1502T01	95	161	128.8	1865
	1800	445T	TE1504T01	95.8	164	131.2	1940
	1200	447T	TE1506T01	95.8	168	134.4	2738
200	3600	447TS	TE2002T01	95.4	219	175.2	2072
	1800	447T	TE2004T01	96.2	222	177.6	2216
	1200	449T	TE2006T01	95.8	229	183.2	2506

NEMA

Standard Full Line Motors

IEEE-841 Motors

Mounting and overall dimensions

143-5011T

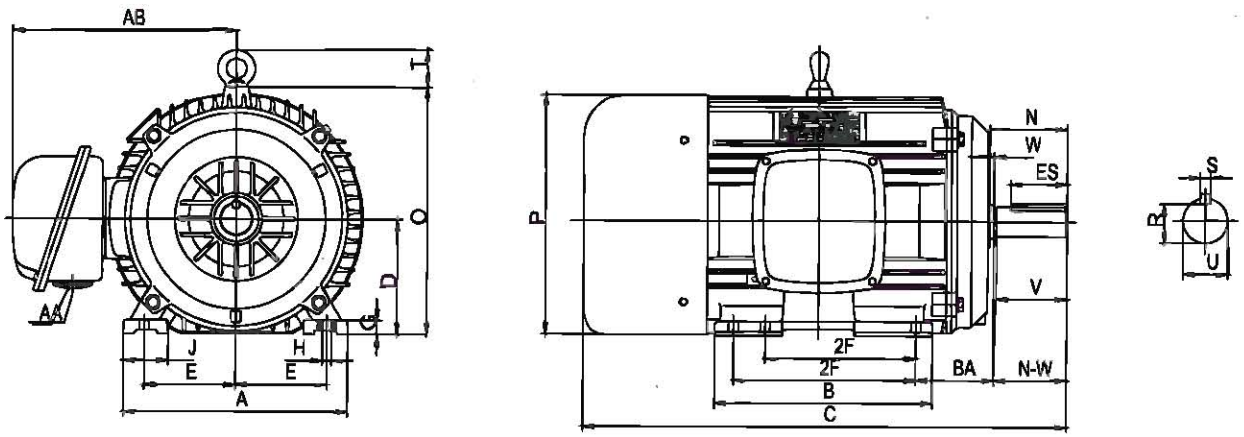

Type	A	B	C	D	E	2F	G	H	J	O	P	R	S	T	U	Vmin	Esmin	AA	AB	BA	N	N-W
143T	7	6	15.35	3.5	2.75	4	0.52	0.34	1.58	7.52	7.68	0.771	0.188	1.42	0.875	2	1.41	¾	7.36	2.25	2.44	2.25
145T	7	6	15.35	3.5	2.75	5	0.52	0.34	1.58	7.52	7.68	0.771	0.188	1.42	0.875	2	1.41	¾	7.36	2.25	2.44	2.25
182T	9	7.3	17.72	4.5	3.75	4.5	0.67	0.41	1.97	9.83	10.16	0.986	0.25	1.73	1.125	2.5	1.78	¾	8.66	2.75	2.99	2.75
184T	9	7.3	17.72	4.5	3.75	5.5	0.67	0.41	1.97	9.83	10.16	0.986	0.25	1.73	1.125	2.5	1.78	¾	8.66	2.75	2.99	2.75
213T	10.5	9.4	22.25	5.25	4.25	5.5	0.73	0.41	2.2	11.62	11.65	1.201	0.312	2.05	1.375	3.12	2.41	1	9.65	3.5	3.65	3.38
215T	10.5	9.4	22.25	5.25	4.25	7	0.73	0.41	2.2	11.62	11.65	1.201	0.312	2.05	1.375	3.12	2.41	1	9.65	3.5	3.65	3.38
254T	12.3	12	27	6.25	5	8.25	0.79	0.53	2.44	13.8	13.98	1.416	0.375	2.05	1.625	3.75	2.91	1-1/4	12.26	4.25	4.4	4
256T	12.3	12	27	6.25	5	10	0.79	0.53	2.44	13.8	13.98	1.416	0.375	2.05	1.625	3.75	2.91	1-1/4	12.26	4.25	4.4	4
284T	13.8	13.6	30.2	7	5.5	9.5	0.87	0.53	2.84	15.6	15.63	1.591	0.5	2.44	1.875	4.38	3.28	1-1/2	13.98	4.75	5.02	4.62
286T	13.8	13.6	30.2	7	5.5	11	0.87	0.53	2.84	15.6	15.63	1.591	0.5	2.44	1.875	4.38	3.28	1-1/2	13.98	4.75	5.02	4.62
284TS	13.8	13.6	28.83	7	5.5	9.5	0.87	0.53	2.84	15.6	15.63	1.416	0.375	2.44	1.625	3	1.91	1-1/2	13.98	4.75	5.02	3.25
286TS	13.8	13.6	28.83	7	5.5	11	0.87	0.53	2.84	15.6	15.63	1.416	0.375	2.44	1.625	3	1.91	1-1/2	13.98	4.75	5.02	3.25
324T	15.3	14.1	32.4	8	6.25	10.5	1.03	0.66	2.95	17.32	17.46	1.845	0.5	2.44	2.125	5	3.91	2	15.55	5.25	5.25	5.25
326T	15.3	14.1	32.4	8	6.25	12	1.03	0.66	2.95	17.32	17.46	1.845	0.5	2.44	2.125	5	3.91	2	15.55	5.25	5.25	5.25
324TS	15.3	14.1	30.9	8	6.25	10.5	1.03	0.66	2.95	17.32	17.46	1.591	0.5	2.44	1.875	3.5	2.03	2	15.55	5.25	5.65	3.75
326TS	15.3	14.1	30.9	8	6.25	12	1.03	0.66	2.95	17.32	17.46	1.591	0.5	2.44	1.875	3.5	2.03	2	15.55	5.25	5.65	3.75
364T	17.2	16.2	36.5	9	7	11.25	1.1	0.66	3.23	18.98	19.06	2.021	0.625	2.44	2.375	5.62	4.28	3	16.56	5.88	6.28	5.88
365T	17.2	16.2	36.5	9	7	12.25	1.1	0.66	3.23	18.98	19.06	2.021	0.625	2.44	2.375	5.62	4.28	3	16.56	5.88	6.28	5.88
364TS	17.2	16.2	34.02	9	7	11.25	1.1	0.66	3.23	18.98	19.06	1.591	0.5	2.44	1.875	3.5	2.03	3	16.56	5.88	6.28	3.75
365TS	17.2	16.2	34.02	9	7	12.25	1.1	0.66	3.23	18.98	19.06	1.591	0.5	2.44	1.875	3.5	2.03	3	16.56	5.88	6.28	3.75
404T	19.2	20	41.36	10	8	12.25	1.2	0.81	3.35	20.96	21.56	2.45	0.75	2.84	2.875	7	5.65	3	18.37	6.62	7.28	7.25
405T	19.2	20	41.36	10	8	13.75	1.2	0.81	3.35	20.96	21.56	2.45	0.75	2.84	2.875	7	5.65	3	18.37	6.62	7.28	7.25
404TS	19.2	20	38.36	10	8	12.25	1.2	0.81	3.35	20.96	21.56	1.845	0.5	2.84	2.215	4	2.78	3	18.37	6.62	7.73	4.25
405TS	19.2	20	38.36	10	8	13.75	1.2	0.81	3.35	20.96	21.56	1.845	0.5	2.84	2.215	4	2.78	3	18.37	6.62	7.73	4.25
444T	21.8	21.26	47.25	11	9	14.5	1.2	0.81	3.74	23.5	23.35	2.88	0.875	4.1	3.375	8.25	6.91	3	20.87	7.5	8.98	8.5
445T	21.8	21.26	47.25	11	9	16.5	1.2	0.81	3.74	23.5	23.35	2.88	0.875	4.1	3.375	8.25	6.91	3	20.87	7.5	8.98	8.5
444TS	21.8	21.26	43.5	11	9	14.5	1.2	0.81	3.74	23.5	23.35	2.021	0.625	4.1	2.375	4.5	3.03	3	20.87	7.5	8.98	4.75
445TS	21.8	21.26	43.5	11	9	16.5	1.2	0.81	3.74	23.5	23.35	2.021	0.625	4.1	2.375	4.5	3.03	3	20.87	7.5	8.98	4.75
447T	21.8	28.74	53.55	11	9	20	1.2	0.81	3.74	23.5	23.35	2.88	0.875	4.1	3.375	8.25	6.91	3	20.87	7.5	8.98	8.5
449T	21.8	28.74	53.55	11	9	25	1.2	0.81	3.74	23.5	23.35	2.88	0.875	4.1	3.375	8.25	6.91	3	20.87	7.5	8.98	8.5
447TS	21.8	28.74	49.8	11	9	20	1.2	0.81	3.74	23.5	23.35	2.021	0.625	4.1	2.375	4.5	3.03	3	20.87	7.5	8.98	4.75
449TS	21.8	28.74	49.8	11	9	25	1.2	0.81	3.74	23.5	23.35	2.021	0.625	4.1	2.375	4.5	3.03	3	20.87	7.5	8.98	4.75
5007TS	28.7	31.1	64.8	14.5	10	20	2.05	1.125	4.72	28.4	28.2	3.309	1	5	3.825	--	10	2X3	24	10	12.125	11.625
5011TS	28.7	31.1	64.8	14.5	10	25	2.05	1.125	4.72	28.4	28.2	3.309	1	5	3.825	--	10	2X3	24	10	12.125	11.625