IE2(GB3) 高效三相异步电动机
HIGH EFFICIENCY THREE-PHASE ASYNCHRONOUS MOTOR

IE2(3级)代号说明 IE2 DESIGNATION

JM1 200L-4

- 极数 No.of poles
- 铁芯长度 Core length
- 机座号 Frame size
- IE2(3级能效 GB3)
- 金龙产品代号 JINGLONG motor identification symbol

JL1 112 M-4

- 极数 No.of poles
- 铁芯长度 Core length
- 机座号 Frame size
- IE2(3级能效 GB3)
- 金龙产品代号 JINGLONG motor identification symbol

防护等级
PROTECTION DEGREE

IP-5 5

- 防喷淋 Splashproof
- 防尘 Protecting against dust
- 国际防护表征字母 International protection symbol

冷却方式
COOLING METHOD

IC-411

- 全封闭自扇冷式 Totally-enclosed fan-cooled type
- 国际冷却法 International cooling symbol

JM1 IE2(3级能效 GB3)技术参数 TECHNICAL DATA

SPEED 3000RPM 2-POLE 50HZ

型号 Type	额定功率 Rated Output		额定转速 Rated Speed rpm	效率 Efficiency η% (IE2)	效率 75%负载 Efficiency at 75% load	效率 50%负载 Efficiency at 50% load	功率因数 Power factor cosΦ	额定电流 Rated current A			额定转矩 Rated Torque Nm	堵转转矩/额定转矩 Ts/Tn	最大转矩/额定转矩 Tmax/Tn	堵转电流/额定电流 Is/In	重量 Weight kg
	kW	HP						380V	400V	415V					
JM1-711-2	0.37	0.5	2745	69.5	69.5	68.1	0.81	1.00	0.95	0.91	1.29	2.2	2.3	6.1	10
JM1-712-2	0.55	0.75	2745	74.1	74.1	72.6	0.82	1.38	1.31	1.26	1.91	2.3	2.3	6.1	10.5
JM1-801-2	0.75	1	2875	77.4	77.4	75.9	0.83	1.77	1.69	1.62	2.49	2.3	2.3	6.8	16
JM1-802-2	1.1	1.5	2875	79.6	79.6	78.0	0.84	2.50	2.37	2.29	3.65	2.3	2.3	7.1	17
JM1-90S-2	1.5	2	2890	81.3	81.3	79.7	0.84	3.34	3.17	3.06	4.96	2.3	2.3	7.3	20.3
JM1-90L-2	2.2	3	2890	83.2	83.2	81.5	0.85	4.73	4.49	4.33	7.27	2.3	2.3	7.6	23.2
JM1-100L-2	3	4	2891	84.6	84.6	82.9	0.87	6.19	5.88	5.67	9.91	2.2	2.3	7.8	33
JM1-112M-2	4	5.5	2914	85.8	85.8	84.1	0.88	8.05	7.65	7.37	13.1	2.2	2.3	8.1	41.1
JM1-132S1-2	5.5	7.5	2937	87.0	87.0	85.3	0.86	11.2	10.6	10.2	17.9	2.2	2.3	8.2	55.5
JM1-132S2-2	7.5	10	2940	88.1	88.1	86.3	0.88	14.7	14.0	13.5	24.4	2.2	2.3	7.8	61.7
JM1-160M1-2	11	15	2930	89.4	89.4	87.6	0.89	21.0	20.0	19.2	35.9	2.2	2.3	7.9	108
JM1-160M2-2	15	20	2930	90.3	90.3	88.5	0.89	28.4	26.9	26.0	48.9	2.2	2.3	7.9	122
JM1-160L-2	18.5	25	2937	90.9	90.9	89.1	0.89	34.7	33.0	31.8	60.2	2.2	2.3	8.0	140
JM1-180M-2	22	30	2940	91.3	91.3	89.5	0.88	41.6	39.5	38.1	71.5	2.2	2.3	8.1	178
JM1-200L1-2	30	40	2950	92.0	92.0	90.2	0.88	56.3	53.5	51.6	97.1	2.0	2.3	7.5	229
JM1-200L2-2	37	50	2950	92.5	92.5	90.7	0.89	68.3	64.9	62.5	119.8	2.0	2.3	7.5	249
JM1-225M-2	45	60	2960	92.9	92.9	91.0	0.89	82.7	78.6	75.7	145.2	2.2	2.3	7.5	322
JM1-250M-2	55	75	2965	93.2	93.2	91.3	0.90	99.6	94.6	91.2	177.2	2.2	2.3	7.6	401
JM1-280S-2	75	100	2970	93.8	93.8	91.9	0.90	135	128	124	241.2	1.8	2.3	6.9	533
JM1-280M-2	90	125	2970	94.1	94.1	92.2	0.91	160	152	146	289.4	1.8	2.3	6.9	568
JM1-315S-2	110	150	2975	94.3	94.3	92.4	0.91	195	185	178	353.1	1.8	2.2	7.0	914
JM1-315M-2	132	180	2975	94.6	94.6	92.7	0.91	233	221	213	423.7	1.8	2.2	7.0	1029
JM1-315L1-2	160	200	2975	94.8	94.8	92.9	0.92	279	265	255	513.6	1.8	2.2	7.1	1067
JM1-315L2-2	200	270	2975	95.0	95.0	93.1	0.92	348	330	318	642.0	1.8	2.2	7.1	1194
JM1-355M-2	250	340	2980	95.0	95.0	93.1	0.92	435	413	398	801.2	1.6	2.2	7.1	1597
JM1-355L-2	315	430	2980	95.0	95.0	93.1	0.92	548	520	501	1009.5	1.6	2.2	7.2	1702

SPEED 1500RPM 4-POLE 50HZ

型号 Type	额定功率 Rated Output		额定转速 Rated Speed rpm	效率 Efficiency η% (IE2)	效率 75%负载 Efficiency at 75% load	效率 50%负载 Efficiency at 50% load	功率因数 Power factor cosΦ	额定电流 Rated current A			额定转矩 Rated Torque Nm	堵转转矩/额定转矩 Ts/Tn	最大转矩/额定转矩 Tmax/Tn	堵转电流/额定电流 Is/In	重量 Weight kg
	kW	HP						380V	400V	415V					
JM1-711-4	0.25	0.37	1335	68.5	68.5	67.1	0.74	0.75	0.71	0.69	1.79	2.1	2.2	5.2	13.2
JM1-712-4	0.37	0.5	1335	72.7	72.7	71.2	0.75	1.03	0.98	0.94	2.65	2.1	2.2	5.2	14.5
JM1-801-4	0.55	0.75	1400	77.1	77.1	75.6	0.75	1.45	1.37	1.32	3.75	2.3	2.3	5.2	14.7
JM1-802-4	0.75	1	1400	79.6	79.6	78.0	0.76	1.88	1.79	1.72	5.12	2.4	2.5	5.0	15.4
JM1-90S-4	1.1	1.5	1440	81.4	81.4	79.8	0.77	2.67	2.53	2.44	7.30	2.4	2.5	6.0	20.5
JM1-90L-4	1.5	2	1445	82.8	82.8	81.1	0.77	3.57	3.40	3.27	9.91	2.7	3.0	6.8	24.6
JM1-100L1-4	2.2	3	1440	84.3	84.3	82.6	0.81	4.90	4.65	4.48	14.6	2.7	3.0	7.0	34.6
JM1-100L2-4	3	4	1440	85.5	85.5	83.8	0.82	6.50	6.18	5.95	19.9	2.6	2.8	7.0	35
JM1-112M-4	4	5.5	1445	86.6	86.6	84.9	0.82	8.56	8.13	7.84	26.4	2.6	2.8	7.5	51.5
JM1-132S-4	5.5	7.5	1455	87.7	87.7	85.9	0.83	11.5	10.9	10.5	36.1	2.2	2.8	6.4	62.8
JM1-132M-4	7.5	10	1455	88.7	88.7	86.9	0.84	15.3	14.5	14.0	49.2	2.2	2.8	7.0	81
JM1-160M-4	11	15	1460	89.8	89.8	88.0	0.84	22.2	21.0	20.3	72.0	2.1	2.8	6.9	114
JM1-160L-4	15	20	1460	90.6	90.6	88.8	0.85	29.6	28.1	27.1	98.1	2.1	2.8	7.5	136
JM1-180M-4	18.5	25	1470	91.2	91.2	89.4	0.86	35.8	34.0	32.8	120.2	2.1	2.8	7.8	176
JM1-180L-4	22	30	1470	91.6	91.6	89.8	0.86	42.4	40.3	38.9	142.9	2.1	2.8	7.5	196
JM1-200L-4	30	40	1470	92.3	92.3	90.5	0.86	57.4	54.6	52.6	194.9	2.0	2.5	7.1	259
JM1-225S-4	37	50	1480	92.7	92.7	90.8	0.87	59.7	66.2	63.8	238.8	2.0	2.5	7.5	302
JM1-225M-4	45	60	1480	93.1	93.1	91.2	0.87	84.4	80.2	77.3	290.4	2.0	2.5	7.6	329
JM1-250M-4	55	75	1480	93.5	93.5	91.6	0.87	103	97.6	94.1	354.9	1.8	2.2	7.3	418
JM1-280S-4	75	100	1480	94.0	94.0	92.1	0.87	139	132	128	484.0	1.8	2.2	7.6	546
JM1-280M-4	90	125	1480	94.2	94.2	92.3	0.87	167	159	153	580.7	1.8	2.2	7.5	638
JM1-315S-4	110	150	1485	94.5	94.5	92.6	0.88	201	191	184	707.4	1.8	2.2	7.1	939
JM1-315M-4	132	180	1485	94.7	94.7	92.8	0.88	240	229	220	848.9	1.8	2.2	7.3	1033
JM1-315L1-4	160	200	1485	94.9	94.9	93.0	0.89	288	273	264	1029.0	1.8	2.2	7.4	1126
JM1-315L2-4	200	270	1485	95.1	95.1	93.2	0.89	359	341	329	1286.2	1.8	2.2	7.6	1229
JM1-355M-4	250	340	1490	95.1	95.1	93.2	0.90	444	422	406	1602.3	1.8	2.2	7.5	1670
JM1-355L-4	315	430	1490	95.1	95.1	93.2	0.90	559	531	512	2019.0	1.8	2.2	7.4	2848

JM1 IE2(3级能效 GB3)技术参数 TECHNICAL DATA

SPEED 1000RPM 6-POLE 50HZ

型号 Type	额定功率 Rated Output		额定转速 Rated Speed rpm	效率 Efficiency η% (IE2)	效率 75%负载 Efficiency at 75% load	效率 50%负载 Efficiency at 50% load	功率因数 Power factor cosΦ	额定电流 Rated current A			额定转矩 Rated Torque Nm	堵转转矩/额定转矩 Ts/Tn	最大转矩/额定转矩 Tmax/Tn	堵转电流/额定电流 Is/In	重量 Weight kg
	kW	HP						380V	400V	415V					
JM1-711-6	0.18	0.25	850	56.6	56.6	55.5	0.66	0.73	0.70	0.67	2.0	1.9	2.0	4.0	9.5
JM1-712-6	0.25	0.37	850	61.6	61.6	60.4	0.68	0.91	0.86	0.83	2.8	1.9	2.0	4.0	10
JM1-801-6	0.37	0.5	885	67.6	67.6	66.2	0.70	1.19	1.13	1.09	4.0	1.9	2.0	4.7	13.2
JM1-802-6	0.55	0.75	885	73.1	73.1	71.6	0.72	1.59	1.51	1.45	5.9	1.9	2.1	4.7	14.4
JM1-90S-6	0.75	1	934	75.9	75.9	74.4	0.72	2.09	1.98	1.91	7.7	2.0	2.1	5.8	23.3
JM1-90L-6	1.1	1.5	945	78.1	78.1	76.5	0.72	2.97	2.82	2.72	11.1	2.0	2.1	5.9	26.6
JM1-100L-6	1.5	2	945	79.8	79.8	78.2	0.75	3.81	3.62	3.49	15.2	2.0	2.1	5.9	36.2
JM1-112M-6	2.2	3	960	81.8	81.8	80.2	0.76	5.38	5.11	4.92	21.9	2.0	2.1	6.2	51.2
JM1-132S-6	3	4	964	83.3	83.3	81.6	0.76	7.20	6.84	6.59	29.7	2.0	2.1	6.4	56.1
JM1-132M1-6	4	5.5	965	84.6	84.6	82.9	0.76	9.45	8.98	8.66	39.6	2.0	2.1	6.6	71.4
JM1-132M2-6	5.5	7.5	965	86.0	86.0	84.3	0.77	12.6	12.0	11.6	54.4	2.0	2.1	6.8	73.7
JM1-160M-6	7.5	10	970	87.2	87.2	85.5	0.78	16.8	15.9	15.3	73.8	2.0	2.1	6.8	112
JM1-160L-6	11	15	970	88.7	88.7	86.9	0.78	24.2	22.9	22.1	108.3	2.0	2.1	6.9	133
JM1-180L-6	15	20	975	89.7	89.7	87.9	0.81	31.4	29.8	28.7	146.9	2.0	2.1	7.3	183
JM1-200L1-6	18.5	25	980	90.4	90.4	88.6	0.81	38.4	36.5	35.1	180.3	2.0	2.1	7.2	224
JM1-200L2-6	22	30	980	90.9	90.9	89.1	0.83	44.3	42.1	40.6	214.4	2.0	2.1	7.3	240
JM1-225M-6	30	40	980	91.7	91.7	89.9	0.84	59.2	56.2	54.2	292.3	2.0	2.1	6.8	285
JM1-250M-6	37	50	980	92.2	92.2	90.4	0.86	70.9	67.4	64.9	360.6	2.0	2.1	7.0	389
JM1-280S-6	45	60	980	92.7	92.7	90.8	0.86	85.8	81.5	78.5	438.5	2.0	2.0	7.2	489
JM1-280M-6	55	75	980	93.1	93.1	91.2	0.86	104	99.2	95.6	536.0	2.0	2.0	7.2	550
JM1-315S-6	75	100	985	93.7	93.7	91.8	0.86	141	134	129	727.2	2.0	2.0	6.5	838
JM1-315M-6	90	125	985	94.0	94.0	92.1	0.86	169	161	155	872.6	2.0	2.0	6.6	941
JM1-315L1-6	110	150	985	94.3	94.3	92.4	0.86	206	196	189	1066.5	2.0	2.0	6.6	986
JM1-315L2-6	132	180	985	94.6	94.6	92.7	0.87	244	231	223	1279.8	2.0	2.0	6.6	1121
JM1-355M1-6	160	200	990	94.8	94.8	92.9	0.88	291	277	267	1543.4	2.0	2.0	6.7	1650
JM1-355M2-6	200	270	990	95.0	95.0	93.1	0.88	363	345	333	1929.3	2.0	2.0	6.8	1752
JM1-355L-6	250	340	990	95.0	95.0	93.1	0.88	454	432	416	2411.6	2.0	2.0	6.8	1990

SPEED 750RPM 8-POLE 50HZ

型号 Type	额定功率 Rated Output		额定转速 Rated Speed rpm	效率 Efficiency η% (IE2)	效率 75%负载 Efficiency at 75% load	效率 50%负载 Efficiency at 50% load	功率因数 Power factor cosΦ	额定电流 Rated current A			额定转矩 Rated Torque Nm	堵转转矩/额定转矩 Ts/Tn	最大转矩/额定转矩 Tmax/Tn	堵转电流/额定电流 Is/In	重量 Weight kg
	kW	HP						380V	400V	415V					
JM1-712-8	0.12	0.18	605	39.8	39.8	39.0	0.57	0.80	0.76	0.74	1.89	1.8	1.9	2.8	9.6
JM1-801-8	0.18	0.25	650	45.9	45.9	45.0	0.61	0.98	0.93	0.89	2.64	1.8	1.9	3.3	12.7
JM1-802-8	0.25	0.37	650	50.6	50.6	49.6	0.61	1.23	1.17	1.13	3.67	1.8	1.9	3.3	14.5
JM1-90S-8	0.37	0.5	675	56.1	56.1	55.0	0.61	1.64	1.56	1.50	5.23	1.8	1.9	4.0	24.5
JM1-90L-8	0.55	0.75	675	61.7	61.7	60.5	0.61	2.22	2.11	2.03	7.78	1.8	2.0	4.0	25.8
JM1-100L1-8	0.75	1	685	66.2	66.2	64.9	0.67	2.57	2.44	2.35	10.5	1.8	2.0	4.0	34.5
JM1-100L2-8	1.1	1.5	685	70.8	70.8	69.4	0.69	3.42	3.25	3.13	15.3	1.8	2.0	5.0	36
JM1-112M-8	1.5	2	695	74.1	74.1	72.6	0.70	4.39	4.17	4.02	20.6	1.8	2.0	5.0	50
JM1-132S-8	2.2	3	710	77.6	77.6	76.0	0.71	6.07	5.76	5.56	29.6	1.8	2.0	6.0	65
JM1-132M-8	3	4	710	80.0	80.0	78.4	0.73	7.80	7.41	7.15	40.4	1.8	2.0	6.0	81
JM1-160M1-8	4	5.5	725	81.9	81.9	80.3	0.73	10.2	9.66	9.31	52.7	1.9	2.0	6.0	92
JM1-160M2-8	5.5	7.5	725	83.8	83.8	82.1	0.74	13.5	12.8	12.3	72.4	1.9	2.0	6.0	115
JM1-160L-8	7.5	10	725	85.3	85.3	83.6	0.75	17.8	16.9	16.3	98.8	1.9	2.0	6.0	124
JM1-180L-8	11	15	735	86.9	86.9	85.2	0.75	25.6	24.4	23.5	142.9	2.0	2.0	6.5	180
JM1-200L-8	15	20	730	88.0	88.0	86.2	0.76	34.1	32.4	31.2	196.2	2.0	2.0	6.6	213
JM1-225S-8	18.5	25	730	88.6	88.6	86.8	0.76	41.7	39.7	38.2	242.0	1.9	2.0	6.6	263
JM1-225M-8	22	30	730	89.1	89.1	87.3	0.78	48.1	45.7	44.0	287.8	1.9	2.0	6.6	301
JM1-250M-8	30	40	735	89.8	89.8	88.0	0.79	64.3	61.0	58.8	389.8	1.9	2.0	6.5	394
JM1-280S-8	37	50	735	90.3	90.3	88.5	0.79	78.8	74.9	72.2	480.7	1.9	2.0	6.6	480
JM1-280M-8	45	60	735	90.7	90.7	88.9	0.79	95.4	90.6	87.4	584.7	1.9	2.0	6.6	539
JM1-315S-8	55	75	735	91.0	91.0	89.2	0.81	113	108	104	714.6	1.8	2.0	6.6	820
JM1-315M-8	75	100	735	91.6	91.6	89.8	0.81	154	146	141	974.5	1.8	2.0	6.2	916
JM1-315L1-8	90	125	735	91.9	91.9	90.1	0.82	181	172	166	1169.4	1.8	2.0	6.4	1000
JM1-315L2-8	110	150	735	92.3	92.3	90.5	0.82	221	210	202	1429.3	1.8	2.0	6.4	1015
JM1-355M1-8	132	180	740	92.6	92.6	90.7	0.82	264	251	242	1703.5	1.8	2.0	6.4	1715
JM1-355M2-8	160	220	740	93.0	93.0	91.1	0.82	319	303	292	2064.9	1.8	2.0	6.4	1866
JM1-355L-8	200	270	740	93.5	93.5	91.6	0.83	392	372	359	2581.1	1.8	2.0	6.4	1948

JM1 IE2(3级能效 GB3)安装及外型尺寸 MOUNTING AND OVERALL DIMENSIONS-JM1

IM B3 H63-355

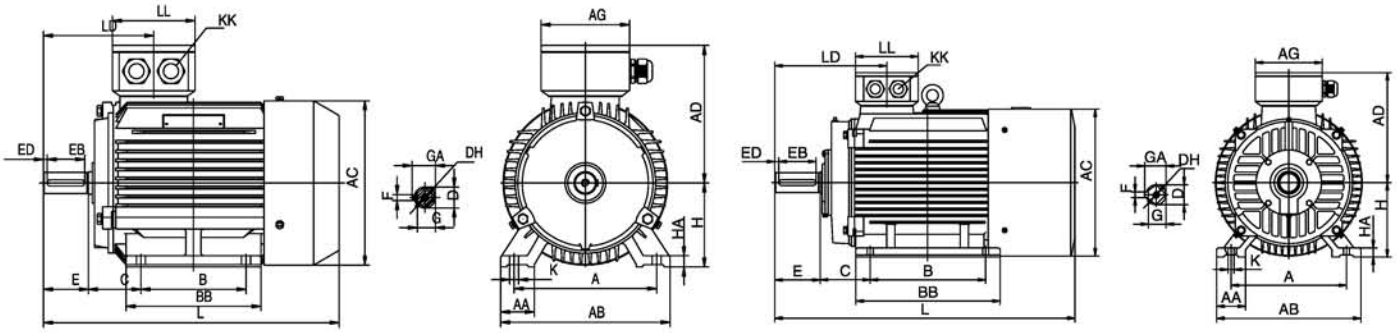

71-132

160-355

型号 Type	极数 Pole	A	AA	AB	AC	AD	AG	B	BB	C	D	DH	E	EB	ED	F	G	GA	H	HA	K	KK	L	LD	LL
71	2,4,6	112	32	144	136	119	94	90	120	45	14	M5X12	30	25	2.5	5	11	16	71	8	4-Φ7	1-M20X1.5	242	99	94
80	2,4,6,8	125	34	160	155.4	131	94	100	130	50	19	M6X16	40	30	5	6	15.5	21.5	80	10	4-Φ10	1-M25X1.5	284	112	94
90S	2,4,6,8	140	36	176	175.4	148	102	100	130	56	24	M8X19	50	40	5	8	20	27	90	12	4-Φ10	1-M25X1.5	318	130	102
90L	2,4,6,8	140	36	176	175.4	148	102	125	155	56	24	M8X19	50	40	5	8	20	27	90	12	4-Φ10	1-M25X1.5	343	130	102
100L	2,4,6,8	160	40	200	195.4	162	102	140	176	63	28	M10X22	60	50	5	8	24	31	100	14	4-Φ12	1-M32X1.5	370	139	102
112M	2,4,6,8	190	45	226	219.4	183	118	140	180	70	28	M10X22	60	50	5	8	24	31	112	15	4-Φ12	2-M32X1.5	394	147	110
132S	2,4,6,8	216	55	262	258.4	203	118	140	186	89	38	M12X28	80	65	7.5	10	33	41	132	18	4-Φ12	2-M32X1.5	456	172	110
132M	4,6,8	216	55	262	258.4	203	118	178	224	89	38	M12X28	80	65	7.5	10	33	41	132	18	4-Φ12	2-M32X1.5	494	172	110
160M	2,4,6,8	254	65	314	314	251	162	210	260	108	42	M16X36	110	90	10	12	37	45	160	20	4-Φ14.5	2-M40X1.5	608	256	152
160L	2,4,6,8	254	65	314	314	251	162	254	304	108	42	M16X36	110	90	10	12	37	45	160	20	4-Φ14.5	2-M40X1.5	652	256	152
180M	2,4,8	279	70	349	355	267	162	241	311	121	48	M16X36	110	90	10	14	42.5	51.5	180	22	4-Φ14.5	2-M40X1.5	688	271	152
180L	4,6,8	279	70	349	355	267	162	279	349	121	48	M16X36	110	90	10	14	42.5	51.5	180	22	4-Φ14.5	2-M40X1.5	726	271	152
200L	2,4,6,8	318	70	388	397	299	210	305	369	133	55	M20X42	110	100	5	16	49	59	200	25	4-Φ18.5	2-M50X1.5	771	296	190
225S	4,8	356	75	431	446	322	210	286	368	149	60	M20X42	140	125	7.5	18	53	64	225	28	4-Φ18.5	2-M50X1.5	824	329	190
225M	2	356	75	431	446	322	210	311	393	149	55	M20X42	110	100	5	16	49	59	225	28	4-Φ18.5	2-M50X1.5	819	299	190
225M	4,6,8	356	75	431	446	322	210	311	393	149	60	M20X42	140	125	7.5	18	53	64	225	28	4-Φ18.5	2-M50X1.5	849	329	190
250M	2	406	80	484	485	358	248	349	445	168	60	M20X42	140	125	7.5	18	53	64	250	30	4-Φ24	2-M63X1.5	910	347	218
250M	4,6,8	406	80	484	485	358	248	349	445	168	65	M20X42	140	125	7.5	18	58	69	250	30	4-Φ24	2-M63X1.5	910	347	218
280S	2	457	85	542	547	387	248	368	485	190	65	M20X42	140	125	7.5	18	58	69	280	35	4-Φ24	2-M63X1.5	982	355.5	218
280S	4,6,8	457	85	542	547	387	248	368	485	190	75	M20X42	140	125	7.5	20	67.5	79.5	280	35	4-Φ24	2-M63X1.5	982	355.5	218
280M	2	457	85	542	547	387	248	419	536	190	65	M20X42	140	125	7.5	18	58	69	280	35	4-Φ24	2-M63X1.5	1033	355.5	218
280M	4,6,8	457	85	542	547	387	248	419	536	190	75	M20X42	140	125	7.5	20	67.5	79.5	280	35	4-Φ24	2-M63X1.5	1033	355.5	218
315S	2	508	120	628	620	527	320	406	570	216	65	M20X42	140	125	7.5	18	58	69	315	45	4-Φ28	2-M63X1.5	1178	397	280
315S	4,6,8,10	508	120	628	620	527	320	406	570	216	80	M20X42	170	160	5	22	71	85	315	45	4-Φ28	2-M63X1.5	1208	427	280
315M	2	508	120	628	620	527	320	457	680	216	65	M20X42	140	125	7.5	18	58	69	315	45	4-Φ28	2-M63X1.5	1288	397	280
315M	4,6,8,10	508	120	628	620	527	320	457	680	216	80	M20X42	170	160	5	22	71	85	315	45	4-Φ28	2-M63X1.5	1318	427	280
315L	2	508	120	628	620	527	320	508	680	216	65	M20X42	140	125	7.5	18	58	69	315	45	4-Φ28	2-M63X1.5	1288	397	280
315L	4,6,8,10	508	120	628	620	527	320	508	680	216	80	M20X42	170	160	5	22	71	85	315	45	4-Φ28	2-M63X1.5	1318	427	280
355M	2	610	116	726	698	642	380	560	750	254	75	M20X42	140	130	5	20	67.5	79.5	355	52	6-Φ28	2-M63X1.5	1486	414	330
355M	4,6,8,10	610	116	726	698	642	380	560	750	254	95	M24X50	170	160	5	25	86	100	355	52	6-Φ28	2-M63X1.5	1516	444	330
355L	2	610	116	726	698	642	380	630	750	254	75	M20X42	140	130	5	20	67.5	79.5	355	52	6-Φ28	2-M63X1.5	1486	414	330
355L	4,6,8,10	610	116	726	698	642	380	630	750	254	95	M24X50	170	160	5	25	86	100	355	52	6-Φ28	2-M63X1.5	1516	444	330

JM1 IE2(3级能效 GB3)安装及外型尺寸 MOUNTING AND OVERALL DIMENSIONS-JM1

IM B5 H63-355

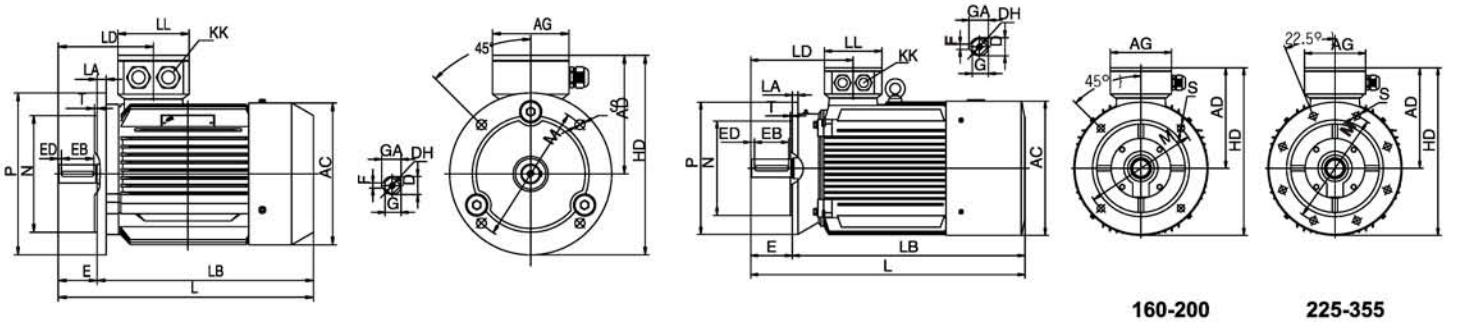

71-132

160-200

225-355

型号 Type	极数 Pole	AC	AD	AG	D	DH	E	EB	ED	F	G	GA	HD	KK	L	LA	LB	LD	LL	M	N	P	S	T
71	2,4,6	136	119	94	14	M5X12	30	25	2.5	5	11	16	199	1-M20X1.5	242	10	212	99	94	130	110	160	10	3.5
80	2,4,6,8	155.4	131	94	19	M6X16	40	30	5	6	15.5	21.5	231	1-M25X1.5	284	12	244	112	94	165	130	200	12	3.5
90S	2,4,6,8	175.4	148	102	24	M8X19	50	40	5	8	20	27	248	1-M25X1.5	318	12	258	130	102	165	130	200	12	3.5
90L	2,4,6,8	175.4	148	102	24	M8X19	50	40	5	8	20	27	248	1-M25X1.5	343	12	283	130	102	165	130	200	12	3.5
100L	2,4,6,8	195.4	162	102	28	M10X22	60	50	5	8	24	31	287	1-M32X1.5	370	13	320	139	102	215	180	250	14.5	4
112M	2,4,6,8	219.4	183	118	28	M10X22	60	50	5	8	24	31	308	2-M32X1.5	394	14	334	147	110	215	180	250	14.5	4
132S	2,4,6,8	258.4	203	118	38	M12X28	80	65	7.5	10	33	41	353	2-M32X1.5	456	14	390	172	110	265	230	300	14.5	4
132M	4,6,8	258.4	203	118	38	M12X28	80	65	7.5	10	33	41	353	2-M32X1.5	494	14	428	172	110	265	230	300	14.5	4
160M	2,4,6,8	314	251	162	42	M16X36	110	90	10	12	37	45	426	2-M40X1.5	608	15	498	256	152	300	250	350	18.5	5
160L	2,4,6,8	314	251	162	42	M16X36	110	90	10	12	37	45	426	2-M40X1.5	652	15	542	256	152	300	250	350	18.5	5
180M	2,4,8	355	267	162	48	M16X36	110	90	10	14	42.5	51.5	444.5	2-M40X1.5	688	15	578	271	152	300	250	350	18.5	5
180L	4,6,8	355	267	162	48	M16X36	110	90	10	14	42.5	51.5	444.5	2-M40X1.5	726	15	616	271	152	300	250	350	18.5	5
200L	2,4,6,8	397	299	210	55	M20X42	110	100	5	16	49	59	499	2-M50X1.5	771	17	661	296	190	350	300	400	18.5	5
225S	4,8	446	322	210	60	M20X42	140	125	7.5	18	53	64	547	2-M50X1.5	824	20	684	329	190	400	350	450	18.5	5
225M	2	446	322	210	55	M20X42	110	100	5	16	49	59	547	2-M50X1.5	819	20	709	299	190	400	350	450	18.5	5
225M	4,6,8	446	322	210	60	M20X42	140	125	7.5	18	53	64	547	2-M50X1.5	849	20	709	329	190	400	350	450	18.5	5
250M	2	485	358	248	60	M20X42	140	125	7.5	18	53	64	633	2-M63X1.5	910	22	770	347	218	500	450	550	18.5	5
250M	4,6,8	485	358	248	65	M20X42	140	125	7.5	18	58	69	633	2-M63X1.5	910	22	770	347	218	500	450	550	18.5	5
280S	2	547	387	248	65	M20X42	140	125	7.5	18	58	69	662	2-M63X1.5	982	22	842	355.5	218	500	450	550	18.5	5
280S	4,6,8	547	387	248	75	M20X42	140	125	7.5	20	67.5	79.5	662	2-M63X1.5	982	22	842	355.5	218	500	450	550	18.5	5
280M	2	547	387	248	65	M20X42	140	125	7.5	18	58	69	662	2-M63X1.5	1033	22	893	355.5	218	500	450	550	18.5	5
280M	4,6,8	547	387	248	75	M20X42	140	125	7.5	20	67.5	79.5	662	2-M63X1.5	1033	22	893	355.5	218	500	450	550	18.5	5
315S	2	620	527	320	65	M20X42	140	125	7.5	18	58	69	857	2-M63X1.5	1178	22	1038	397	280	600	550	660	24	6
315S	4,6,8,10	620	527	320	80	M20X42	170	160	5	22	71	85	857	2-M63X1.5	1208	22	1038	427	280	600	550	660	24	6
315M	2	620	527	320	65	M20X42	140	125	7.5	18	58	69	857	2-M63X1.5	1288	22	1148	397	280	600	550	660	24	6
315M	4,6,8,10	620	527	320	80	M20X42	170	160	5	22	71	85	857	2-M63X1.5	1318	22	1148	427	280	600	550	660	24	6
315L	2	620	527	320	65	M20X42	140	125	7.5	18	58	69	857	2-M63X1.5	1288	22	1148	397	280	600	550	660	24	6
315L	4,6,8,10	620	527	320	80	M20X42	170	160	5	22	71	85	857	2-M63X1.5	1318	22	1148	427	280	600	550	660	24	6
355M	2	698	642	380	75	M20X42	140	130	5	20	67.5	79.5	1042	2-M63X1.5	1486	25	1346	414	330	740	680	800	24	6
355M	4,6,8,10	698	642	380	95	M24X50	170	160	5	25	86	100	1042	2-M63X1.5	1516	25	1346	444	330	740	680	800	24	6
355L	2	698	642	380	75	M20X42	140	130	5	20	67.5	79.5	1042	2-M63X1.5	1486	25	1346	414	330	740	680	800	24	6
355L	4,6,8,10	698	642	380	95	M24X50	170	160	5	25	86	100	1042	2-M63X1.5	1516	25	1346	444	330	740	680	800	24	6

JM1 IE2(3级能效 GB3)安装及外型尺寸 MOUNTING AND OVERALL DIMENSIONS-JM1

IM B35 H63-355

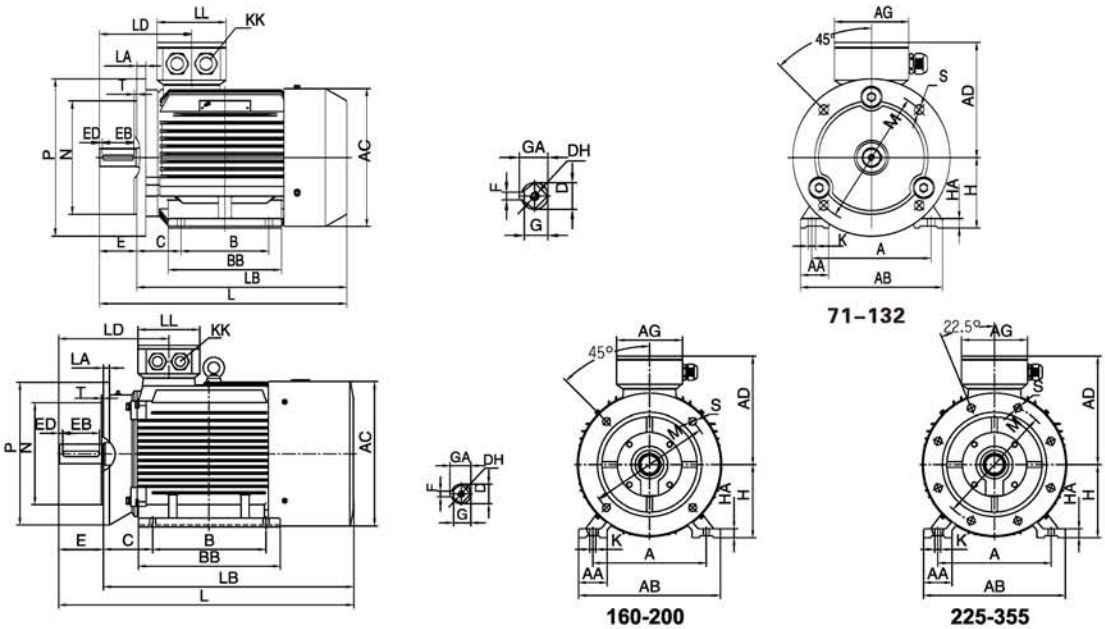

型号 Type	极数 Pole	A	AA	AB	AC	AD	AG	B	BB	C	D	DH	E	EB	ED	F	G	GA	H	HA	K	KK	L	LA	LB	LD	LL	M	N	P	S	T
71	2,4,6	112	32	144	136	119	94	90	120	45	14	M5X12	30	25	2.5	5	11	16	71	8	4-Φ7	1-M20X1.5	242	10	212	99	94	130	110	160	10	3.5
80	2,4,6,8	125	34	160	155.4	131	94	100	130	50	19	M6X16	40	30	5	6	15.5	21.5	80	10	4-Φ10	1-M25X1.5	284	12	244	112	94	165	130	200	12	3.5
90S	2,4,6,8	140	36	176	175.4	148	102	100	130	56	24	M8X19	50	40	5	8	20	27	90	12	4-Φ10	1-M25X1.5	318	12	258	130	102	165	130	200	12	3.5
90L	2,4,6,8	140	36	176	175.4	148	102	125	155	56	24	M8X19	50	40	5	8	20	27	90	12	4-Φ10	1-M25X1.5	343	12	283	130	102	165	130	200	12	3.5
100L	2,4,6,8	160	40	200	195.4	162	102	140	176	63	28	M10X22	60	50	5	8	24	31	100	14	4-Φ12	1-M32X1.5	370	13	320	139	102	215	180	250	14.5	4
112M	2,4,6,8	190	45	226	219.4	183	118	140	180	70	28	M10X22	60	50	5	8	24	31	112	15	4-Φ12	2-M32X1.5	394	14	334	147	110	215	180	250	14.5	4
132S	2,4,6,8	216	55	262	258.4	203	118	140	186	89	38	M12X28	80	65	7.5	10	33	41	132	18	4-Φ12	2-M32X1.5	456	14	390	172	110	265	230	300	14.5	4
132M	4,6,8	216	55	262	258.4	203	118	178	224	89	38	M12X28	80	65	7.5	10	33	41	132	18	4-Φ12	2-M32X1.5	494	14	428	172	110	265	230	300	14.5	4
160M	2,4,6,8	254	65	314	314	251	162	210	260	108	42	M16X36	110	90	10	12	37	45	160	20	4-Φ14.5	2-M40X1.5	608	15	498	256	152	300	250	350	18.5	5
160L	2,4,6,8	254	65	314	314	251	162	254	304	108	42	M16X36	110	90	10	12	37	45	160	20	4-Φ14.5	2-M40X1.5	652	15	542	256	152	300	250	350	18.5	5
180M	2,4,8	279	70	349	355	267	162	241	311	121	48	M16X36	110	90	10	14	42.5	51.5	180	22	4-Φ14.5	2-M40X1.5	688	15	578	271	152	300	250	350	18.5	5
180L	4,6,8	279	70	349	355	267	162	279	349	121	48	M16X36	110	90	10	14	42.5	51.5	180	22	4-Φ14.5	2-M40X1.5	726	15	616	271	152	300	250	350	18.5	5
200L	2,4,6,8	318	70	388	397	299	210	305	369	133	55	M20X42	110	100	5	16	49	59	200	25	4-Φ18.5	2-M50X1.5	771	17	661	296	190	350	300	400	18.5	5
225S	4,8	356	75	431	446	322	210	286	368	149	60	M20X42	140	125	7.5	18	53	64	225	28	4-Φ18.5	2-M50X1.5	824	20	684	329	190	400	350	450	18.5	5
225M	2	356	75	431	446	322	210	311	393	149	55	M20X42	110	100	5	16	49	59	225	28	4-Φ18.5	2-M50X1.5	819	20	709	299	190	400	350	450	18.5	5
225M	4,6,8	356	75	431	446	322	210	311	393	149	60	M20X42	140	125	7.5	18	53	64	225	28	4-Φ18.5	2-M50X1.5	849	20	709	329	190	400	350	450	18.5	5
250M	2	406	80	484	485	358	248	349	445	168	60	M20X42	140	125	7.5	18	53	64	250	30	4-Φ24	2-M63X1.5	910	22	770	347	218	500	450	550	18.5	5
250M	4,6,8	406	80	484	485	358	248	349	445	168	65	M20X42	140	125	7.5	18	58	69	250	30	4-Φ24	2-M63X1.5	910	22	770	347	218	500	450	550	18.5	5
280S	2	457	85	542	547	387	248	368	485	190	65	M20X42	140	125	7.5	18	58	69	280	35	4-Φ24	2-M63X1.5	982	22	842	355.5	218	500	450	550	18.5	5
280S	4,6,8	457	85	542	547	387	248	368	485	190	75	M20X42	140	125	7.5	20	67.5	79.5	280	35	4-Φ24	2-M63X1.5	982	22	842	355.5	218	500	450	550	18.5	5
280M	2	457	85	542	547	387	248	419	536	190	65	M20X42	140	125	7.5	18	58	69	280	35	4-Φ24	2-M63X1.5	1033	22	893	355.5	218	500	450	550	18.5	5
280M	4,6,8	457	85	542	547	387	248	419	536	190	75	M20X42	140	125	7.5	20	67.5	79.5	280	35	4-Φ24	2-M63X1.5	1033	22	893	355.5	218	500	450	550	18.5	5
315S	2	508	120	628	620	527	320	406	570	216	65	M20X42	140	125	7.5	18	58	69	315	45	4-Φ28	2-M63X1.5	1178	22	1038	397	280	600	550	660	24	6
315S	4,6,8,10	508	120	628	620	527	320	406	570	216	80	M20X42	170	160	5	22	71	85	315	45	4-Φ28	2-M63X1.5	1208	22	1038	427	280	600	550	660	24	6
315M	2	508	120	628	620	527	320	457	680	216	65	M20X42	140	125	7.5	18	58	69	315	45	4-Φ28	2-M63X1.5	1288	22	1148	397	280	600	550	660	24	6
315M	4,6,8,10	508	120	628	620	527	320	457	680	216	80	M20X42	170	160	5	22	71	85	315	45	4-Φ28	2-M63X1.5	1318	22	1148	427	280	600	550	660	24	6
315L	2	508	120	628	620	527	320	508	680	216	65	M20X42	140	125	7.5	18	58	69	315	45	4-Φ28	2-M63X1.5	1288	22	1148	397	280	600	550	660	24	6
315L	4,6,8,10	508	120	628	620	527	320	508	680	216	80	M20X42	170	160	5	22	71	85	315	45	4-Φ28	2-M63X1.5	1318	22	1148	427	280	600	550	660	24	6
355M	2	610	116	726	698	642	380	560	750	254	75	M20X42	140	130	5	20	67.5	79.5	355	52	6-Φ28	2-M63X1.5	1486	25	1346	414	330	740	680	800	24	6
355M	4,6,8,10	610	116	726	698	642	380	560	750	254	95	M24X50	170	160	5	25	86	100	355	52	6-Φ28	2-M63X1.5	1516	25	1346	444	330	740	680	800	24	6
355L	2	610	116	726	698	642	380	630	750	254	75	M20X42	140	130	5	20	67.5	79.5	355	52	6-Φ28	2-M63X1.5	1486	25	1346	414	330	740	680	800	24	6
355L	4,6,8,10	610	116	726	698	642	380	630	750	254	95	M24X50	170	160	5	25	86	100	355	52	6-Φ28	2-M63X1.5	1516	25	1346	444	330	740	680	800	24	6

JM1 IE2(3级能效 GB3)安装及外型尺寸 MOUNTING AND OVERALL DIMENSIONS-JM1

IM V1 H160-355

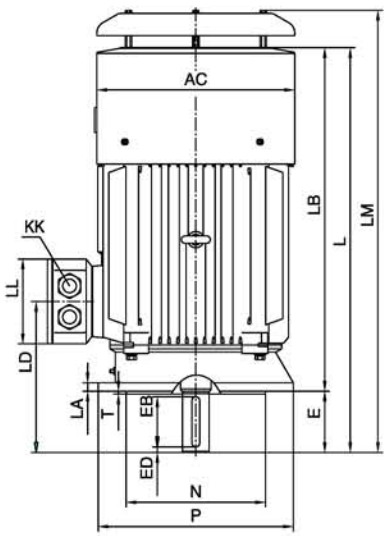

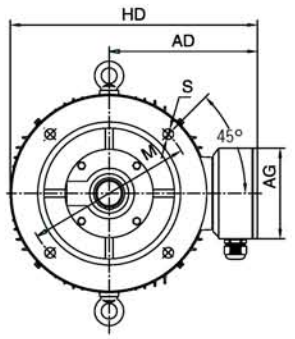

160-200

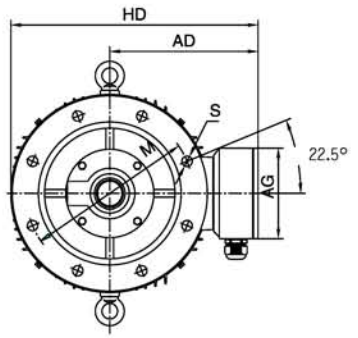

225-355

型号 Type	极数 Pole	AC	AD	AG	D	DH	E	EB	ED	F	G	GA	HD	KK	L	LA	LB	LD	LL	LM	M	N	P	S	T
160M	2,4,6,8	314	251	162	42	M16X36	110	90	10	12	37	45	426	2-M40X1.5	608	15	498	256	152	670	300	250	350	18.5	5
160L	2,4,6,8	314	251	162	42	M16X36	110	90	10	12	37	45	426	2-M40X1.5	652	15	542	256	152	714	300	250	350	18.5	5
180M	2,4,8	355	267	162	48	M16X36	110	90	10	14	42.5	51.5	444.5	2-M40X1.5	688	15	578	271	152	760	300	250	350	18.5	5
180L	4,6,8	355	267	162	48	M16X36	110	90	10	14	42.5	51.5	444.5	2-M40X1.5	726	15	616	271	152	798	300	250	350	18.5	5
200L	2,4,6,8	397	299	210	55	M20X42	110	100	5	16	49	59	499	2-M50X1.5	771	17	661	296	190	845	350	300	400	18.5	5
225S	4,8	446	322	210	60	M20X42	140	125	7.5	18	53	64	547	2-M50X1.5	824	20	684	329	190	898	400	350	450	18.5	5
225M	2	446	322	210	55	M20X42	110	100	5	16	49	59	547	2-M50X1.5	819	20	709	299	190	893	400	350	450	18.5	5
225M	4,6,8	446	322	210	60	M20X42	140	125	7.5	18	53	64	547	2-M50X1.5	849	20	709	329	190	893	400	350	450	18.5	5
250M	2	485	358	248	60	M20X42	140	125	7.5	18	53	64	633	2-M63X1.5	910	22	770	347	218	986	500	450	550	18.5	5
250M	4,6,8	485	358	248	65	M20X42	140	125	7.5	18	58	69	633	2-M63X1.5	910	22	770	347	218	986	500	450	550	18.5	5
280S	2	547	387	248	65	M20X42	140	125	7.5	18	58	69	662	2-M63X1.5	982	22	842	355.5	218	1058	500	450	550	18.5	5
280S	4,6,8	547	387	248	75	M20X42	140	125	7.5	20	67.5	79.5	662	2-M63X1.5	982	22	842	355.5	218	1058	500	450	550	18.5	5
280M	2	547	387	248	65	M20X42	140	125	7.5	18	58	69	662	2-M63X1.5	1033	22	893	355.5	218	1109	500	450	550	18.5	5
280M	4,6,8	547	387	248	75	M20X42	140	125	7.5	20	67.5	79.5	662	2-M63X1.5	1033	22	893	355.5	218	1109	500	450	550	18.5	5
315S	2	620	527	284	65	M20X42	140	125	7.5	18	58	69	857	2-M63X1.5	1178	22	1038	397	280	1259	600	550	660	24	6
315S	4,6,8,10	620	527	284	80	M20X42	170	160	5	22	71	85	857	2-M63X1.5	1208	22	1038	427	280	1289	600	550	660	24	6
315M	2	620	527	284	65	M20X42	140	125	7.5	18	58	69	857	2-M63X1.5	1288	22	1148	397	280	1369	600	550	660	24	6
315M	4,6,8,10	620	527	284	80	M20X42	170	160	5	22	71	85	857	2-M63X1.5	1318	22	1148	427	280	1399	600	550	660	24	6
315L	2	620	527	284	65	M20X42	140	125	7.5	18	58	69	857	2-M63X1.5	1288	22	1148	397	280	1369	600	550	660	24	6
315L	4,6,8,10	620	527	284	80	M20X42	170	160	5	22	71	85	857	2-M63X1.5	1318	22	1148	427	280	1399	600	550	660	24	6
355M	2	698	642	380	75	M20X42	140	130	5	20	67.5	79.5	1042	2-M63X1.5	1486	25	1346	414	330	1567	740	680	800	24	6
355M	4,6,8,10	698	642	380	95	M24X50	170	160	5	25	86	100	1042	2-M63X1.5	1516	25	1346	444	330	1597	740	680	800	24	6
355L	2	698	642	380	75	M20X42	140	130	5	20	67.5	79.5	1042	2-M63X1.5	1486	25	1346	414	330	1567	740	680	800	24	6
355L	4,6,8,10	698	642	380	95	M24X50	170	160	5	25	86	100	1042	2-M63X1.5	1516	25	1346	444	330	1597	740	680	800	24	6