YC Series

HEAVY DUTY SERIES SINGLE-PHASE CAPACITOR START ASYNCHRONOUS MOTOR

单相电容起动异步电动机

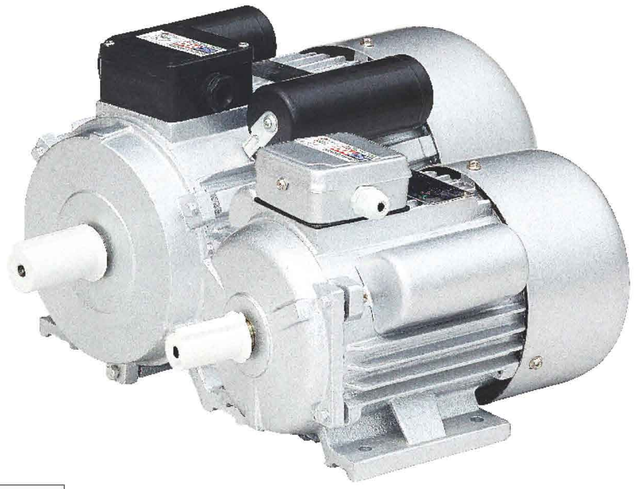

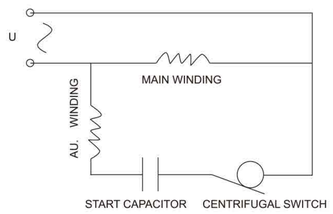

INTRODUCE

The YC series heavy-duty single-phase motors are suitable for powering small type machine tools and water pumps, especially for family workshops where only single-phase current is available. Motors of this series are integrated with up-to-date design, built with the best quality materials and attractive appearance. They have outstanding performance, easy maintenance and are reliable. They completely conform to international I.E.C. standards.
YC series protected motors are of IP44 totally enclosed fan-cooling type. Under rated voltage and 50Hz, the starting torque is three times more than the rated torque and 60Hz is more than 2.75 times. Motors for 4HP and over are of capacitor start and run type. They all have the advantage of high starting torque, smooth running, low temperature rise, low noise and greater overload performance.

简 介

YC系列电动机为全封闭扇冷式，输出功率3HP及以下采用电容起动，在额定电压下50Hz时起动动力矩大于3倍，60Hz时大于2.75倍，输出功率4HP及以上采用电容起动、运转，集中了起动转矩大、运转平稳、温升低、噪声小、过载能力强等优点。

OPERATING CONDITIONS

★Ambient temperature: -15°C<θ<40°C
★Altitude: not exceed 1000m
★Rated voltage: 220V
★Rated frequency: 50Hz/60Hz
★Duty: S1(continuous)
★Insulation class: B/F
★Protection class: IP44/IP54
★Cooling method: IC0141

使用条件

★环境温度：-15°C<θ<40°C
★海拔：不超过1000m
★额定电压：220V
★额定频率：50Hz或60Hz
★工作方式：连续S1
★绝缘等级：B级、F级
★防护等级：IP44, IP54
★冷却方式：IC0141

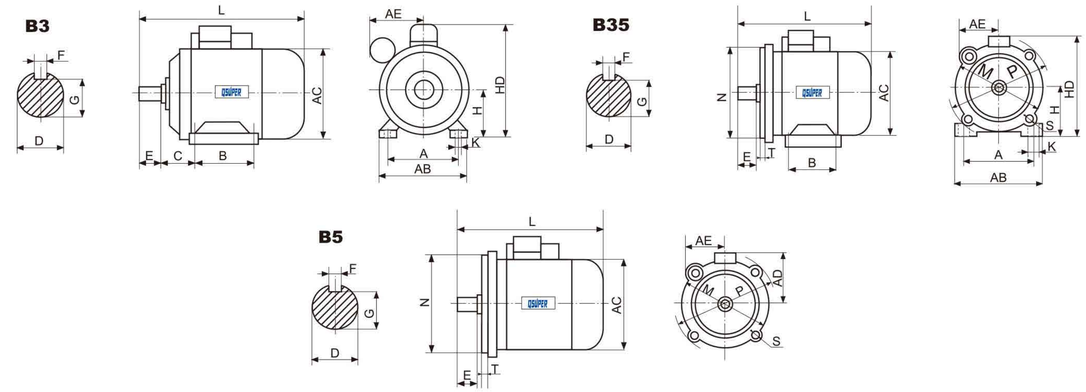

OVERALL&INSTALLATION DIMENSIONS 外形及安装尺寸

Frame size 机座号	Mounting Dimensions 安装尺寸(mm)															Overall Dimensions 外形尺寸(mm)					
	A	B	C	D	E	F	G	H	K	M	N	P	R	S	T	AB	AC	AE	AD	HD	L
80	125	100	50	19	40	6	15.5	80	10	165	130	200	0	12	3.5	160	165	110	120	200	310
90S	140	100	56	24	50	8	20	90	10	165	130	200	0	12	3.5	180	185	120	140	240	355
90L	140	125	56	24	50	8	20	90	10	165	130	200	0	12	3.5	180	185	120	140	240	385
100L	160	140	63	28	60	8	24	100	12	215	180	250	0	15	4.0	205	220	130	145	260	415
112M	190	140	70	28	60	8	24	112	12	215	180	250	0	15	4.0	245	250	140	160	300	448
132S	216	140	89	38	80	10	33	132	12	265	230	300	0	15	4.0	280	262	150	210	350	470
132M	216	178	89	38	80	10	33	132	12	265	230	300	0	15	4.0	280	262	150	210	350	553

TECHNICAL DATA 技术数据 (220V,50Hz)

TYPE 型号	Output 功率		Current 电流 (A)	Power Factor 功率因数	Eff. 效率 (%)	Speed 转速 (r/min)	Tstart/Tn 堵转转矩 额定转矩	Ist/In 堵转电流 额定电流	Tmax/Tn 最大转矩 额定转矩
	HP	KW							
YC711-2	1/4	0.18	1.9	0.70	63.0	2800	3.0	6.5	2.0
YC712-2	1/3	0.25	2.4	0.72	65.0	2800	3 .0	6.5	2.0
YC80A-2	1/2	0.37	3.5	0.74	66.0	2840	3.0	6.5	2.0
YC80B-2	3/4	0.55	5.04	0.74	67.0	2850	3.0	6.5	2.0
YC80C-2	1	0.75	6.68	0.75	68.0	2850	3.0	6.5	2.0
YC90S-2	1.5	1.1	8.93	0.80	70.0	2850	2.8	7.0	2.0
YC90L-2	2	1.5	11.4	0.82	73.0	2870	2.8	7.0	2.0
YC100L-2	3	2.2	16.5	0.82	74.0	2900	2.5	7.0	2.0
YC112M1-2	4	3	21.4	0.84	76.0	2900	2.2	7.0	2.0
YC112M2-2	5	3.7	24.8	0.86	79.0	2900	2.2	7.0	2.0
YC711-4	1/6	0.12	1.9	0.58	48.0	1400	3.0	6.0	2.0
YC712-4	1/4	0.18	2.7	0.60	50.0	1400	3.0	6.0	2.0
YC80A-4	1/3	0.25	3.52	0.62	52.0	1400	3.0	6.0	2.0
YC80B-4	1/2	0.37	4.69	0.64	56.0	1400	3.0	6.0	2.0
YC80C-4	3/4	0.55	6.0	0.65	60.0	1400	3.0	6.0	2.0
YC90S-4	1	0.75	7.5	0.72	63.0	1400	2.8	6.5	2.0
YC90L-4	1.5	1.1	10.4	0.72	67.0	1420	2.8	6.5	2.0
YC100L-4	2	1.5	13.0	0.73	72.0	1440	2.8	6.5	2.0
YC112M-4	3	2.2	18.5	0.74	73.0	1450	2.5	6.5	2.0
YC132S1-4	4	3	22.4	0.80	76.0	1450	2.2	6.5	2.0
YC132S2-4	5	3.7	26.0	0.82	79.0	1450	2.2	6.5	2.0